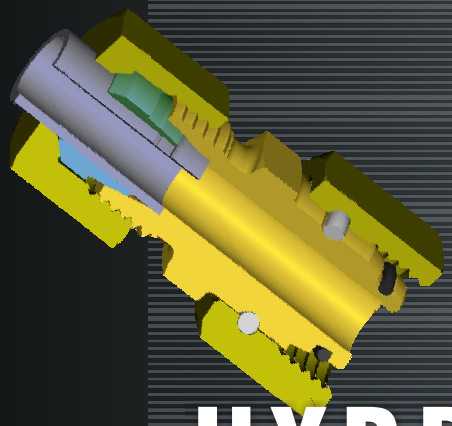

ARCO

HYDRAULIC FITTINGS

MANAGMENT

ARCO
HYDRAULIC FITTINGS

CERTIFICATE

TÜV INDIA

Management System as per
ISO 9001 : 2008

ARCO INDUSTRIES
Kh/912/2, GIDC Estate, Kasu Rehabdeep Industries,
Phase IV, Vatva, Ahmedabad - 382 445,
India

Manufacture and Supply of Hydraulic Fittings

FACILITY

ARCO
HYDRAULIC FITTINGS

FACILITY

ARCO
HYDRAULIC FITTINGS

INDEX

ARCO
HYDRAULIC FITTINGS

Ferrule	Nut	Page
F	N	10 - 11

Tube Fittings

G	W	T	K	12 - 15

Bulkhead Fittings

SV	WSV	16 - 17

Weld Fittings

AS	ESV	18 - 19

Male Stud Fittings

GE	GE-ed	WE	TE	LE	20 - 24

INDEX

ARCO
HYDRAULIC FITTINGS

Female Fittings		Page
GAI	MAV	25 - 26
Stand Pipe Adaptor		
EVGE	EGE-ed	27 - 28
Stand Pipe Fittings for Adaptor		
EVW	EVW-R	
EVT	EVT-R	
EVL	EVL-R	29 - 34
Adjustable Stand Pipe Fittings / Swivel Nut		
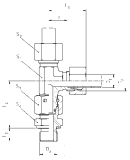		
EW	ET	
ET-R	EL	
EL-R	GZ	35 - 41

INDEX

ARCO
HYDRAULIC FITTINGS

	Page
Weld Nipple	
WN	42
Banjo Fittings	
SWVE	43
Reducers	
RI KOR RED GR	44 - 51
Locking (blanking) components	
BUZ HP VSTI ROV	52 - 54

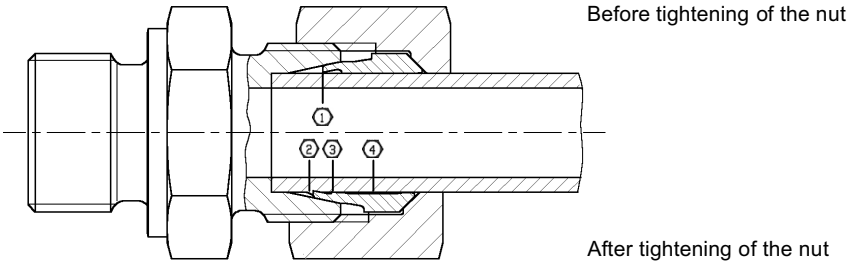

The " ARCO bite - type "fitting is a high pressure coupling. While tightening the nut, the hardened cutting ring slides along the cone of the coupling body, diminishes itself and cuts into the tube, forming a visible ridge of tube - material at ist face. For this function it is essential to ensure that the tube, cut at right angles, abuts firmly on to the step of the coupling body. The angle of the cutting edge is chosen so, that after cutting into the tube, the ring work - hardens the point of cut. A second edge inside of the ring controls the cutting depht. Thus the cutting through of thin - wall tubes is impossible. The surface - hardened cutting ring, with hight toughness in ist core, is now elastically prestressed. Peak pressures and loads by change in temperature or vibration are absorbed by this spring effect, automatic loosening is prevented, and the joint can be broken and remade many times.

Special features of the ARCO pipe coupling are

(1) - One Solid and visible cutting edge (2) - safe checking of the cut (3) - controlled cutting depht by the stop edge (4) - high fatigue resistance as a result of the elastic prestress

- low radial stresses and tightening torques due to the special design of cutting edge

PRESSURES

All stated pressures are nominal pressures (PN), valid for steel couplings and based on a minimum safety factor of 4. In normal conditions and at temperatures of up to + 120°C the working pressure can be identified withe the nominal pressure. In the case of higher temperatures, mechanical strain (vibration) or heavy impulse loads, the working pressure must be reduced if the same safety factor is desired. For details see DIN 2401.

Valid nominal pressures for special couplings are given In the catalogue.

At The material brass (CUZn35Ni2- 2.0540) the pressure rating reduction is 35% from the operating pressure (PN).

TUBE RECOMMENDATIONS

For steel couplings we recommend precision steel tube to DIN 2391/C – St 35.4 NBK.

	Tube O.D. - Ø Tube (mm)																		
PN (bar)	4	5	6	8	10	12	14	15	16	18	20	22	25	28	30	35	38	42	
100	0,5	0,5	1	1	1	1	1	1	1	1,5	1,5	1,5	1,5	1,5	2	2	2,5	2,5	Wall thickness (mm)
160			1	1	1	1	1	1	1,5	1,5	1,5	1,5	2	2	2,5	2,5	3	3	
250			1	1	1,5	1,5	1,5	1,5	1,5	2	2	2	2,5	3	3	3,5	4	4	
320			1	1	1,5	1,5	2	2	2,5	2,5	3	3	3,5	4	4,5				
400			1	1,5	2	2	2,5	2,5	2,5	3	3	4	4						
500			1,5	2	2,5	2,5	3	3	3	4	4	5	5						
630			2	2	3	3	3,5	4	4	5									

☆ All Diamention in Millimeters
☆ Diamentions give are Approx Fig with tightened nut

Pre - Assembly

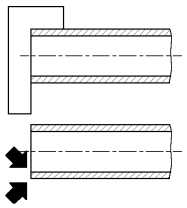

Cut the tube square and burr inside and outside edge. Do not champfer. Clean.

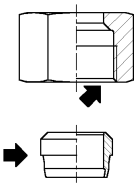

Oil the thread and internal taper of body, the nut inside and cutting-ring – do not grease.

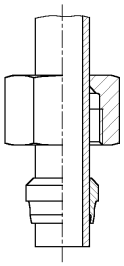

Place the nut and cutting ring on the tube. Ensure that the thicker end of the ring is facing the nut.

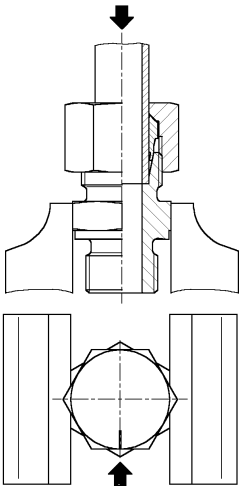

Set coupling body in a vice and tighten nut by hand as far as possible. Mark this position on nut for checking the prescribed turns. Press the tube firmly against the step in the coupling body – otherwise the ring cannot cut in. Tighten nut with spanner about 1 1/2 turns. The tube must not be rotated.

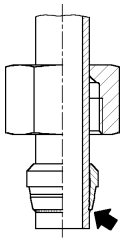

Loosen the nut and inspect the cut. The visibly removed tube material should be just covering the face of the cutting ring. If not, tighten lightly. Owing to the spring effect of the cutting-ring, it is no fault, if it can be rotated on the tube.

Final Assembly

Final assembly of the pre-assembled tube is made in the coupling body by tightening the nut a further 1/6 turn beyond the point, where a noticeable increase of force is required. Each time the coupling is broken, the nut has to be re-tightened without using excessive force – 1/6 turn. The coupling body has to be held firmly by means of a spanner.

Final assembly of studs with factory-made pre-assembly is carried out by tightening the nut at least 1/2 turn beyond the point of increase of force.

Assembly

in hardened Pre-Assembly

Adaptor

The operations are equal to those mentioned above. Please take notice of the following deviations:

- Periodical checking of the adaptors with taper gauges is necessary.
- During pre-assembly the nut has to be tightened with a spanner 1 turn after being finger tight.
- Final assembly in body requires tightening of the nut 1/2 turn beyond the point of noticeable increase of force.

ASSEMBLY

Sealing cone side

Insert sealing cone into coupling body (24° cone).

Tighten nut by hand.

Final tightening is made with spanner about 1/4 - 1/3 turn beyond the point of increase of force.

The copling body has to be held firmly by means of a spanner.

☆ All Diamention in Millimeters
☆ Diamentions give are Approx Fig with tightened nut

ARCO
HYDRAULIC FITTINGS

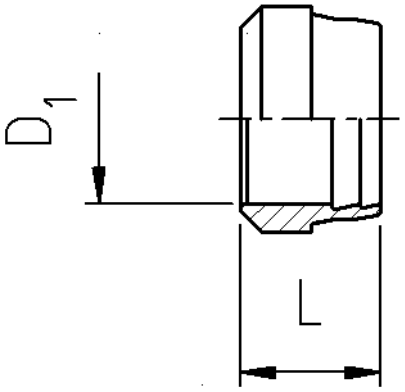

According to DIN 3861

Unmodified pre and final assembly

Advanced security for assembly with protection for over assembly

The dimensionally stable cutting edge guaranteed advanced tube retention force and impermeability

The heightened bearing surface between the cutting ring and nut prevented the composition of the connection

Series	PN (Bar)	D_1	L	Order Code
LL	100	4	6	F 4 LL
LL	100	5	7	F 5 LL
LL	100	6	7	F 6 LL
LL	100	8	7	F 8 LL
L	315	6	9,5	F 6 L
L	315	8	9,5	F 8 L
L	315	10	10	F 10 L
L	315	12	10	F 12 L
L	315	15	10	F 15 L
L	315	18	10	F 18 L
L	160	22	10,5	F 22 L
L	160	28	10,5	F 28 L
L	160	35	13	F 35 L
L	160	42	13,5	F 42 L
S	630	6	9,5	F 6 S
S	630	8	9,5	F 8 S
S	630	10	10	F 10 S
S	630	12	10	F 12 S
S	630	14	10	F 14 S
S	500	16	10	F 16 S
S	400	20	12,5	F 20 S
S	400	25	12,5	F 25 S
S	400	30	13	F 30 S
S	315	38	13,5	F 38 S

☆ All Diamention in Millimeters
☆ Diamentions give are Approx Fig with tightened nut

N - Nuts

ARCO
HYDRAULIC FITTINGS

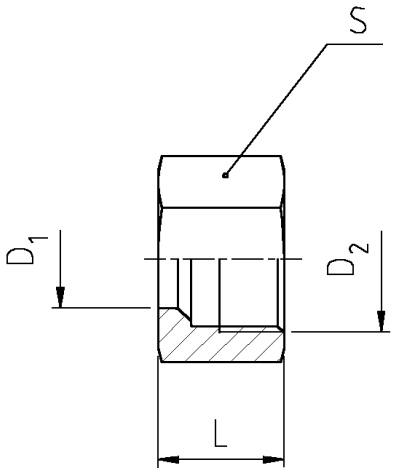

Series	PN (Bar)	D_1	D_2	L	S	Order Code
LL	100	4	M 8 x 1	11	10	N 4 LL
LL	100	5	M 10 x 1	11,5	12	N 5 LL
LL	100	6	M 10 x 1	11,5	12	N 6 LL
LL	100	8	M 12 x 1	12	14	N 8 LL
L	315	6	M 12 x 1,5	14,5	14	N 6 L
L	315	8	M 14 x 1,5	14,5	17	N 8 L
L	315	10	M 16 x 1,5	15,5	19	N 10 L
L	315	12	M 18 x 1,5	15,5	22	N 12 L
L	315	15	M 22 x 1,5	17	27	N 15 L
L	315	18	M 26 x 1,5	18	32	N 18 L
L	160	22	M 30 x 2	20	36	N 22 L
L	160	28	M 36 x 2	21	41	N 28 L
L	160	35	M 45 x 2	24	50	N 35 L
L	160	42	M 52 x 2	24	60	N 42 L
S	630	6	M 14 x 1,5	16,5	17	N 6 S
S	630	8	M 16 x 1,5	16,5	19	N 8 S
S	630	10	M 18 x 1,5	17,5	22	N 10 S
S	630	12	M 20 x 1,5	17,5	24	N 12 S
S	630	14	M 22 x 1,5	20,5	27	N 14 S
S	500	16	M 24 x 1,5	20,5	30	N 16 S
S	400	20	M 30 x 2	24	36	N 20 S
S	400	25	M 36 x 2	27	46	N 25 S
S	400	30	M 42 x 4	29	50	N 30 S
S	315	38	M 52 x 2	32,5	60	N 38 S

☆All Diamention in Millimeters
☆Diamentions give are Approx Fig with tightened nut

G - Straight Couplings (Union)

ARCO
HYDRAULIC FITTINGS

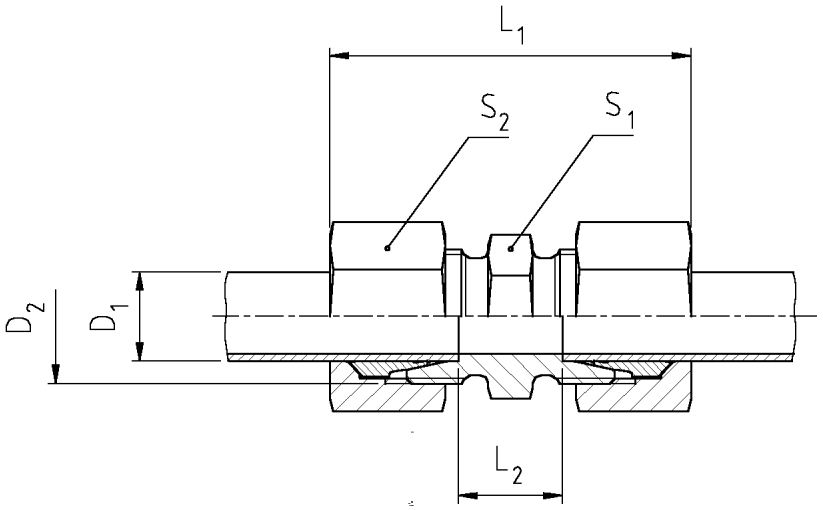

Series	PN (Bar)	D_1	D_2	L_1 ~	L_2	S_1	S_2	Order Code
LL	100	4	M 8 x 1	32	12	9	10	G 4 LL
LL	100	5	M 10 x 1	32	9	11	12	G 5 LL
LL	100	6	M 10 x 1	32	9	11	12	G 6 LL
LL	100	8	M 12 x 1	35	12	12	14	G 8 LL
L	315	6	M 12 x 1,5	39	10	12	14	G 6 L
L	315	8	M 14 x 1,5	40	11	14	17	G 8 L
L	315	10	M 16 x 1,5	42	13	17	19	G 10 L
L	315	12	M 18 x 1,5	43	14	19	22	G 12 L
L	315	15	M 22 x 1,5	47	16	24	27	G 15 L
L	315	18	M 26 x 1,5	48	16	27	32	G 18 L
L	160	22	M 30 x 2	52	20	32	36	G 22 L
L	160	28	M 36 x 2	54	21	41	41	G 28 L
L	160	35	M 45 x 2	63	20	46	50	G 35 L
L	160	42	M 52 x 2	66	21	55	60	G 42 L
S	630	6	M 14 x 1,5	45	16	14	17	G 6 S
S	630	8	M 16 x 1,5	47	18	17	19	G 8 S
S	630	10	M 18 x 1,5	49	17	19	22	G 10 S
S	630	12	M 20 x 1,5	51	19	22	24	G 12 S
S	630	14	M 22 x 1,5	57	22	24	27	G 14 S
S	500	16	M 24 x 1,5	57	21	27	30	G 16 S
S	400	20	M 30 x 2	64	23	32	36	G 20 S
S	400	25	M 36 x 2	74	26	41	46	G 25 S
S	400	30	M 42 x 2	80	27	46	50	G 30 S
S	315	38	M 52 x 2	90	29	55	60	G 38 S

☆All Diamention in Millimeters
☆Diamentions give are Approx Fig with tightened nut

W - Equal Elbows

ARCO
HYDRAULIC FITTINGS

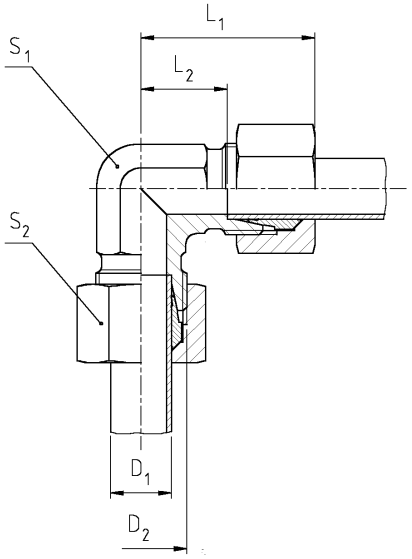

Series	PN (Bar)	D_1	D_2	L_1 ~	L_2	S_1	S_2	Order Code
LL	100	4	M 8 x 1	21	11	9	10	W 4 LL
LL	100	5	M 10 x 1	21	9,5	9	12	W 5 LL
LL	100	6	M 10 x 1	21	9,5	9	12	W 6 LL
LL	100	8	M 12 x 1	23	11,5	12	14	W 8 LL
L	315	6	M 12 x 1,5	27	12	12	14	W 6 L
L	315	8	M 14 x 1,5	29	14	12	17	W 8 L
L	315	10	M 16 x 1,5	30	15	14	19	W 10 L
L	315	12	M 18 x 1,5	32	17	17	22	W 12 L
L	315	15	M 22 x 1,5	36	21	19	27	W 15 L
L	315	18	M 26 x 1,5	40	23,5	24	32	W 18 L
L	160	22	M 30 x 2	44	27,5	27	36	W 22 L
L	160	28	M 36 x 2	47	30,5	36	41	W 28 L
L	160	35	M 45 x 2	56	34,5	41	50	W 35 L
L	160	42	M 52 x 2	63	40	50	60	W 42 L
S	630	6	M 14 x 1,5	31	16	12	17	W 6 S
S	630	8	M 16 x 1,5	32	17	14	19	W 8 S
S	630	10	M 18 x 1,5	34	17,5	17	22	W 10 S
S	630	12	M 20 x 1,5	38	21,5	17	24	W 12 S
S	630	14	M 22 x 1,5	40	22	19	27	W 14 S
S	500	16	M 24 x 1,5	43	24,5	24	30	W 16 S
S	400	20	M 30 x 2	47	26,5	27	36	W 20 S
S	400	25	M 36 x 2	54	30	36	46	W 25 S
S	400	30	M 42 x 2	62	35,5	41	50	W 30 S
S	315	38	M 52 x 2	72	41	50	60	W 38 S

☆ All Diamention in Millimeters
☆ Diamentions give are Approx Fig with tightened nut

T - Equal Tees

ARCO
HYDRAULIC FITTINGS

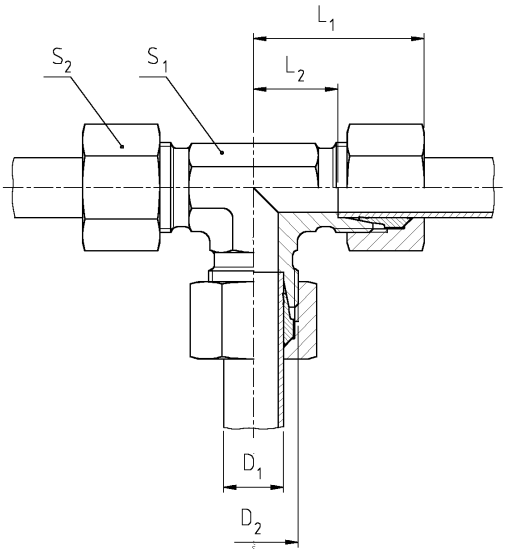

Series	PN (Bar)	D_1	D_2	L_1 ~	L_2	S_1	S_2	Order Code
LL	100	4	M 8 x 1	21	11	9	10	T 4 LL
LL	100	5	M 10 x 1	21	9,5	9	12	T 5 LL
LL	100	6	M 10 x 1	21	9,5	9	12	T 6 LL
LL	100	8	M 12 x 1	27	13,5	12	14	T 8 LL
L	315	6	M 12 x 1,5	27	12	12	14	T 6 L
L	315	8	M 14 x 1,5	29	14	12	17	T 8 L
L	315	10	M 16 x 1,5	30	15	14	19	T 10 L
L	315	12	M 18 x 1,5	32	17	17	22	T 12 L
L	315	15	M 22 x 1,5	36	21	19	27	T 15 L
L	315	18	M 26 x 1,5	40	23,5	24	32	T 18 L
L	160	22	M 30 x 2	44	27,5	27	36	T 22 L
L	160	28	M 36 x 2	47	30,5	36	41	T 28 L
L	160	35	M 45 x 2	56	34,5	41	50	T 35 L
L	160	42	M 52 x 2	63	40	50	60	T 42 L
S	630	6	M 14 x 1,5	31	16	12	17	T 6 S
S	630	8	M 16 x 1,5	32	17	14	19	T 8 S
S	630	10	M 18 x 1,5	34	17,5	17	22	T 10 S
S	630	12	M 20 x 1,5	38	21,5	17	24	T 12 S
S	630	14	M 22 x 1,5	40	22	19	27	T 14 S
S	500	16	M 24 x 1,5	43	24,5	24	30	T 16 S
S	400	20	M 30 x 2	47	26,5	27	36	T 20 S
S	400	25	M 36 x 2	54	30	36	46	T 25 S
S	400	30	M 42 x 2	62	35,5	41	50	T 30 S
S	315	38	M 52 x 2	72	41	50	60	T 38 S

☆All Diamention in Millimeters
☆Diamentions give are Approx Fig with tightened nut

K - Equal Crosses

ARCO
HYDRAULIC FITTINGS

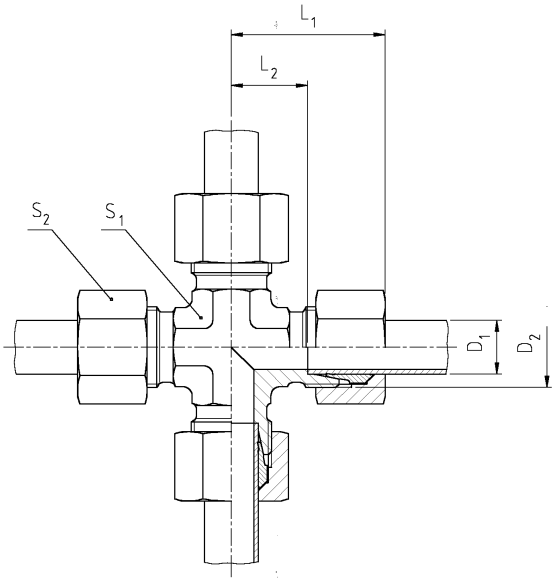

Series	PN (Bar)	D_1	D_2	L_1 ~	L_2	S_1	S_2	Order Code
LL	100	4	M 8 x 1	21	11	9	10	K 4 LL
LL	100	5	M 10 x 1	21	9,5	9	12	K 5 LL
LL	100	6	M 10 x 1	21	9,5	9	12	K 6 LL
LL	100	8	M 12 x 1	27	13,5	12	14	K 8 LL
L	315	6	M 12 x 1,5	27	12	12	14	K 6 L
L	315	8	M 14 x 1,5	29	14	12	17	K 8 L
L	315	10	M 16 x 1,5	30	15	14	19	K 10 L
L	315	12	M 18 x 1,5	32	17	17	22	K 12 L
L	315	15	M 22 x 1,5	36	21	19	27	K 15 L
L	315	18	M 26 x 1,5	40	23,5	24	32	K 18 L
L	160	22	M 30 x 2	44	27,5	27	36	K 22 L
L	160	28	M 36 x 2	47	30,5	36	41	K 28 L
L	160	35	M 45 x 2	62	40,5	50	50	K 35 L
L	160	42	M 52 x 2	63	40	50	60	K 42 L
S	630	6	M 14 x 1,5	31	16	12	17	K 6 S
S	630	8	M 16 x 1,5	32	17	14	19	K 8 S
S	630	10	M 18 x 1,5	34	17,5	17	22	K 10 S
S	630	12	M 20 x 1,5	38	21,5	17	24	K 12 S
S	630	14	M 22 x 1,5	40	22	19	27	K 14 S
S	500	16	M 24 x 1,5	43	24,5	24	30	K 16 S
S	400	20	M 30 x 2	47	26,5	27	36	K 20 S
S	400	25	M 36 x 2	54	30	36	46	K 25 S
S	400	30	M 42 x 2	62	35,5	50	50	K 30 S
S	315	38	M 52 x 2	72	41	50	60	K 38 S

☆ All Diamention in Millimeters
☆ Diamentions give are Approx Fig with tightened nut

SV- Bulkhead Connection

ARCO
HYDRAULIC FITTINGS

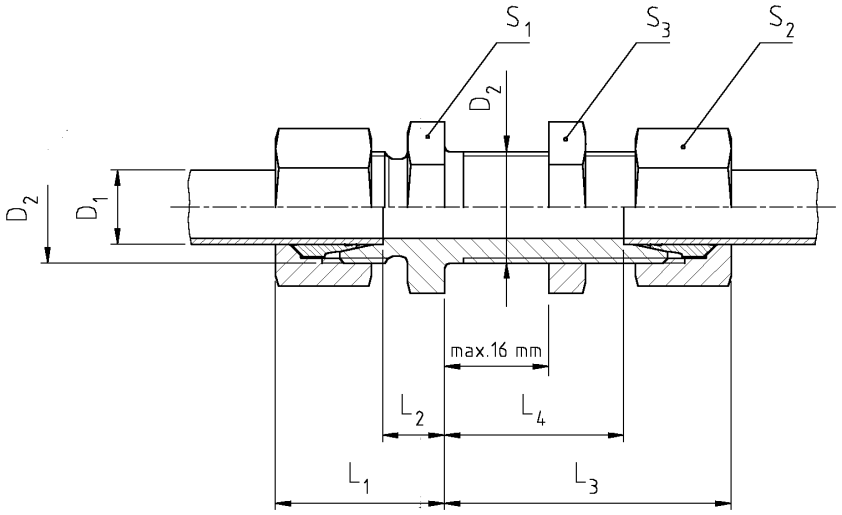

Series	PN (Bar)	D_1	D_2	L_1 ~	L_2	L_3 ~	L_4	S_1	S_2	S_3	Order Code
L	315	6	M 12 x 1,5	22	7	42	27	17	14	17	SV 6 L
L	315	8	M 14 x 1,5	23	8	42	27	19	17	19	SV 8 L
L	315	10	M 16 x 1,5	25	10	43	28	22	19	22	SV 10 L
L	315	12	M 18 x 1,5	25	10	44	29	24	22	24	SV 12 L
L	315	15	M 22 x 1,5	27	12	46	31	27	27	30	SV 15 L
L	315	18	M 26 x 1,5	30	13,5	49	32,5	32	32	36	SV 18 L
L	160	22	M 30 x 2	33	16,5	51	34,5	36	36	41	SV 22 L
L	160	28	M 36 x 2	35	18,5	52	35,5	41	41	46	SV 28 L
L	160	35	M 45 x 2	40	18,5	58	36,5	50	50	55	SV 35 L
L	160	42	M 52 x 2	42	19	59	36	60	60	65	SV 42 L
S	630	6	M 14 x 1,5	27	12	44	29	19	17	19	SV 6 S
S	630	8	M 16 x 1,5	28	13	44	29	22	19	22	SV 8 S
S	630	10	M 18 x 1,5	31	14,5	46	29,5	24	22	24	SV 10 S
S	630	12	M 20 x 1,5	31	14,5	47	30,5	27	24	27	SV 12 S
S	630	14	M 22 x 1,5	35	17	50	32	30	27	30	SV 14 S
S	500	16	M 24 x 1,5	35	16,5	50	31,5	32	30	32	SV 16 S
S	400	20	M 30 x 2	38	17,5	54	33,5	41	36	41	SV 20 S
S	400	25	M 36 x 2	44	20	59	35	46	46	46	SV 25 S
S	400	30	M 42 x 2	48	21,5	64	37,5	50	50	50	SV 30 S
S	315	38	M 52 x 2	53	22	68	37	65	60	65	SV 38 S

☆ All Diamention in Millimeters
☆ Diamentions give are Approx Fig with tightened nut

WSV- Bulkhead Elbows

ARCO
HYDRAULIC FITTINGS

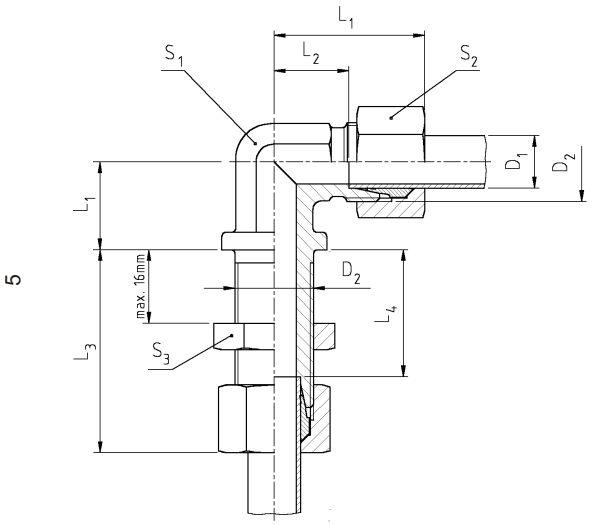

Series	PN (Bar)	D_1	D_2	L_1 ~	L_2	L_3 ~	L_4	L_5	S_1	S_2	S_3	Order Code
L	315	6	M 12 x 1,5	27	12	42	27	14	12	14	17	WSV 6 L
L	315	8	M 14 x 1,5	29	14	42	27	17	12	17	19	WSV 8 L
L	315	10	M 16 x 1,5	30	15	43	28	18	14	19	22	WSV 10 L
L	315	12	M 18 x 1,5	32	17	44	29	20	17	22	24	WSV 12 L
L	315	15	M 22 x 1,5	36	21	46	31	23	19	27	30	WSV 15 L
L	315	18	M 26 x 1,5	40	23,5	49	32,5	24	24	32	36	WSV 18 L
L	160	22	M 30 x 2	44	27,5	51	34,5	30	27	36	41	WSV 22 L
L	160	28	M 36 x 2	47	30,5	52	35,5	34	36	41	46	WSV 28 L
L	160	35	M 45 x 2	56	34,5	58	36,5	39	41	50	55	WSV 35 L
L	160	42	M 52 x 2	63	40	59	36	43	50	60	65	WSV 42 L
S	630	6	M 14 x 1,5	31	16	44	29	17	12	17	19	WSV 6 S
S	630	8	M 16 x 1,5	32	17	44	29	18	14	19	22	WSV 8 S
S	630	10	M 18 x 1,5	34	17,5	46	29,5	20	17	22	24	WSV 10 S
S	630	12	M 20 x 1,5	38	21,5	47	30,5	21	17	24	27	WSV 12 S
S	630	14	M 22 x 1,5	40	22	50	32	23	19	27	30	WSV 14 S
S	500	16	M 24 x 1,5	43	24,5	50	31,5	24	24	30	32	WSV 16 S
S	400	20	M 30 x 2	48	26,5	55	33,5	30	27	36	41	WSV 20 S
S	400	25	M 36 x 2	54	30	59	35	34	36	46	46	WSV 25 S
S	400	30	M 42 x 2	62	35,5	64	37,5	39	41	50	50	WSV 30 S
S	315	38	M 52 x 2	72	41	68	37	43	50	60	65	WSV 38 S

☆ All Diamention in Millimeters
☆ Diamentions give are Approx Fig with tightened nut

AS - Welding Connector

ARCO
HYDRAULIC FITTINGS

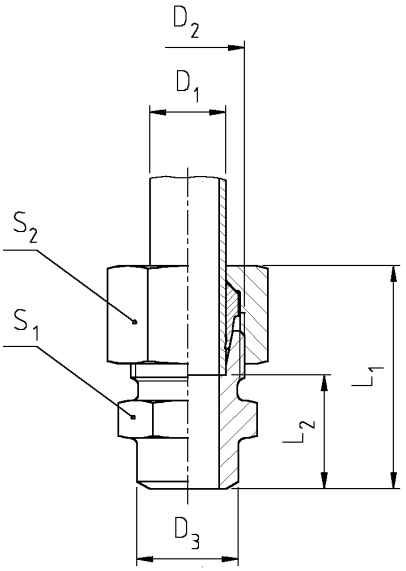

Series	PN (Bar)	D_1	D_2	D_3	L_1 ~	L_2	S_1	S_2	Order Code
L	315	6	M 12 x 1,5	10	29	14	12	14	AS 6 L
L	315	8	M 14 x 1,5	12	31	16	14	17	AS 8 L
L	315	10	M 16 x 1,5	14	33	18	17	19	AS 10 L
L	315	12	M 18 x 1,5	16	33	18	19	22	AS 12 L
L	315	15	M 22 x 1,5	19	37	22	22	27	AS 15 L
L	315	18	M 26 x 1,5	22	40	23,5	27	32	AS 18 L
L	160	22	M 30 x 2	27	45	28,5	32	36	AS 22 L
L	160	28	M 36 x 2	32	47	30,5	41	41	AS 28 L
L	160	35	M 45 x 2	40	54	32,5	46	50	AS 35 L
L	160	42	M 52 x 2	46	58	35	55	60	AS 42 L
S	630	6	M 14 x 1,5	11	34	19	14	17	AS 6 S
S	630	8	M 16 x 1,5	13	36	21	17	19	AS 8 S
S	630	10	M 18 x 1,5	15	39	22,5	19	22	AS 10 S
S	630	12	M 20 x 1,5	17	41	24,5	22	24	AS 12 S
S	630	14	M 22 x 1,5	19	45	27	24	27	AS 14 S
S	500	16	M 24 x 1,5	21	45	26,5	27	30	AS 16 S
S	400	20	M 30 x 2	26	51	29,5	32	36	AS 20 S
S	400	25	M 36 x 2	31	56	32	41	46	AS 25 S
S	400	30	M 42 x 2	36	62	35,5	46	50	AS 30 S
S	315	38	M 52 x 2	44	69	38	55	60	AS 38 S

☆ All Diamention in Millimeters
☆ Diamentions give are Approx Fig with tightened nut

ESV - Welding Bulkhead Connections

ARCO
HYDRAULIC FITTINGS

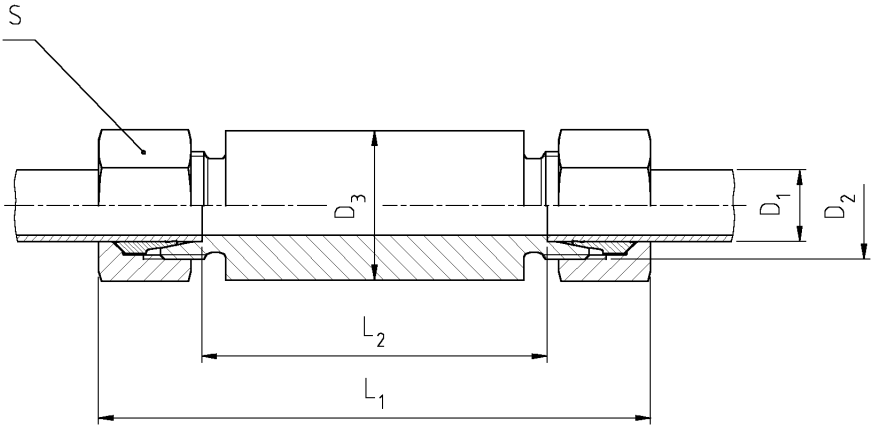

Series	PN (Bar)	D_1	D_2	D_3	L_1 ~	L_2	S_2	Order Code
L	315	6	M 12 x 1,5	18	85	56	14	ESV 6 L
L	315	8	M 14 x 1,5	20	85	56	17	ESV 8 L
L	315	10	M 16 x 1,5	22	87	58	19	ESV 10 L
L	315	12	M 18 x 1,5	25	87	58	22	ESV 12 L
L	315	15	M 22 x 1,5	28	101	70	27	ESV 15 L
L	315	18	M 26 x 1,5	32	101	69	32	ESV 18 L
L	160	22	M 30 x 2	36	105	73	36	ESV 22 L
L	160	28	M 36 x 2	40	106	73	41	ESV 28 L
L	160	35	M 45 x 2	50	114	71	50	ESV 35 L
L	160	42	M 52 x 2	60	115	70	60	ESV 42 L
S	630	6	M 14 x 1,5	20	89	60	17	ESV 6 S
S	630	8	M 16 x 1,5	22	89	60	19	ESV 8 S
S	630	10	M 18 x 1,5	25	91	59	22	ESV 10 S
S	630	12	M 20 x 1,5	28	91	59	24	ESV 12 S
S	630	14	M 22 x 1,5	30	107	72	27	ESV 14 S
S	500	16	M 24 x 1,5	35	107	71	30	ESV 16 S
S	400	20	M 30 x 2	38	112	71	36	ESV 20 S
S	400	25	M 36 x 2	45	120	72	46	ESV 25 S
S	400	30	M 42 x 2	50	126	73	50	ESV 30 S
S	315	38	M 52 x 2	60	133	72	60	ESV 38 S

☆ All Diamention in Millimeters
☆ Diamentions give are Approx Fig with tightened nut

GE - R - Male Stud Couplings

ARCO
HYDRAULIC FITTINGS

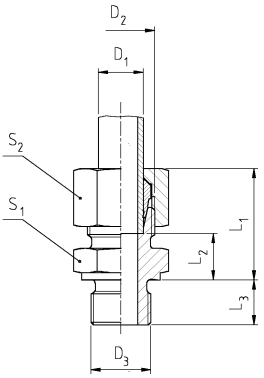

Thread :
B.S.P.
parallel

Series	PN (Bar)	D_1	D_2	D_3	L_1 ~	L_2	L_3	S_1	S_2	Order Code
L	315	6	M 12 x 1,5	G 1/8 A	23	8,5	8	14	14	GE 6 L R
L	315	6	M 12 x 1,5	G 1/4 A	24	10	12	19	14	GE 6 L R 1/4
L	315	6	M 12 x 1,5	G 3/8 A	25	11,5	12	22	14	GE 6 L R 3/8
L	315	6	M 12 x 1,5	G 1/2 A	26	12	14	37	14	GE 6 L R 1/2
L	315	8	M 14 x 1,5	G 1/8 A	25	9,5	8	17	17	GE 8 L R 1/8
L	315	8	M 14 x 1,5	G 1/4 A	25	10	12	19	17	GE 8 L R
L	315	8	M 14 x 1,5	G 3/8 A	26	11,5	12	22	17	GE 8 L R 3/8
L	315	8	M 14 x 1,5	G 1/2 A	27	12	14	27	17	GE 8 L R 1/2
L	315	10	M 16 x 1,5	G 1/8 A	25	10,5	8	17	19	GE 10 L R 1/8
L	315	10	M 16 x 1,5	G 1/4 A	26	11	12	19	19	GE 10 L R
L	315	10	M 16 x 1,5	G 3/8 A	27	12,5	12	22	19	GE 10 L R 3/8
L	315	10	M 16 x 1,5	G 1/2 A	27	13	14	27	19	GE 10 L R 1/2
L	315	10	M 16 x 1,5	G 1 A	30	16	18	41	19	GE 10 L R 1
L	315	12	M 18 x 1,5	G 1/8 A	25	10,5	8	19	22	GE 12 L R 1/8
L	315	12	M 18 x 1,5	G 1/4 A	26	11	12	19	22	GE 12 L R 1/4
L	315	12	M 18 x 1,5	G 3/8 A	27	12,5	12	22	22	GE 12 L R
L	315	12	M 18 x 1,5	G 1/2 A	28	13	14	27	22	GE 12 L R 1/2
L	315	12	M 18 x 1,5	G 3/4 A	29	14	16	32	22	GE 12 L R 3/4
L	315	15	M 22 x 1,5	G 1/4 A	29	14	12	24	27	GE 15 L R 1/4
L	315	15	M 22 x 1,5	G 3/8 A	29	14	12	24	27	GE 15 L R 3/8
L	315	15	M 22 x 1,5	G 1/2 A	29	14	14	27	27	GE 15 L R
L	315	15	M 22 x 1,5	G 3/4 A	30	15	16	32	27	GE 15 L R 3/4
L	315	18	M 26 x 1,5	G 3/8 A	30	14	12	27	32	GE 18 L R 3/8
L	315	18	M 26 x 1,5	G 1/2 A	31	14,5	14	27	32	GE 18 L R
L	315	18	M 26 x 1,5	G 3/4 A	31	14,5	16	32	32	GE 18 L R 3/4
L	315	18	M 26 x 1,5	G 1 A	31	14,5	18	41	32	GE 18 L R 1
L	160	22	M 30 x 2	G 3/8 A	33	16	12	32	36	GE 22 L R 3/8
L	160	22	M 30 x 2	G 1/2 A	33	16,5	14	32	36	GE 22 L R 1/2
L	160	22	M 30 x 2	G 3/4 A	33	16,5	16	32	36	GE 22 L R
L	160	22	M 30 x 2	G 1 A	34	17,5	18	41	36	GE 22 L R 1
L	160	28	M 36 x 2	G 1/2 A	34	17,5	14	41	41	GE 28 L R 1/4
L	160	28	M 36 x 2	G 3/4 A	34	17,5	16	41	41	GE 28 L R 3/4
L	160	28	M 36 x 2	G 1 A	34	17,5	18	41	41	GE 28 L R
L	160	28	M 36 x 2	G 1 1/4 A	35	18,5	20	50	41	GE 28 L R 1 1/4
L	160	35	M 45 x 2	G 3/4 A	39	17,5	16	46	50	GE 35 L R 3/4
L	160	35	M 45 x 2	G 1 A	40	18,5	18	46	50	GE 35 L R 1
L	160	35	M 45 x 2	G 1 1/4 A	39	17,5	20	50	50	GE 35 L R
L	160	35	M 45 x 2	G 1 1/2 A	41	19,5	22	55	50	GE 35 L R 1 1/2
L	160	42	M 52 x 2	G 1 A	42	19	18	55	60	GE 42 L R 1
L	160	42	M 52 x 2	G 1 1/4 A	42	19	20	55	60	GE 42 L R 1 1/4
L	160	42	M 52 x 2	G 1 1/2 A	42	19	22	55	60	GE 42 L R

☆ All Diamention in Millimeters
☆ Diamentions give are Approx Fig with tightened nut

GE - R - Male Stud Couplings

ARCO
HYDRAULIC FITTINGS

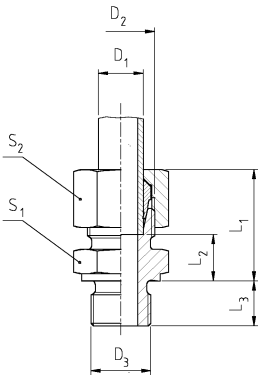

Thread :
B.S.P.
parallel

Series	PN (Bar)	D_1	D_2	D_3	L_1 ~	L_2	L_3	S_1	S_2	Order Code
S	630	6	M 14 x 1,5	G 1/8 A	26	11,5	8	17	17	GE 6 S R 1/8
S	630	6	M 14 x 1,5	G 1/4 A	28	13	12	19	17	GE 6 S R
S	630	6	M 14 x 1,5	G 3/8 A	30	15,5	12	22	17	GE 6 S R 3/8
S	630	6	M 14 x 1,5	G 1/2 A	33	18	14	27	17	GE 6 S R 1/2
S	630	8	M 16 x 1,5	G 1/8 A	30	15	8	17	19	GE 8 S R 1/8
S	630	8	M 16 x 1,5	G 1/4 A	30	15	12	19	19	GE 8 S R
S	630	8	M 16 x 1,5	G 3/8 A	30	15,5	12	22	19	GE 8 S R 3/8
S	630	8	M 16 x 1,5	G 1/2 A	33	18	14	27	19	GE 8 S R 1/2
S	630	10	M 18 x 1,5	G 1/4 A	30	14,5	12	19	22	GE 10 S R 1/4
S	630	10	M 18 x 1,5	G 3/8 A	31	15	12	22	22	GE 10 S R
S	630	10	M 18 x 1,5	G 1/2 A	33	17,5	14	27	22	GE 10 S R 1/2
S	630	10	M 18 x 1,5	G 3/4 A	35	19,5	16	32	22	GE 10 S R 3/4
S	630	12	M 20 x 1,5	G 1/4 A	33	16,5	12	22	24	GE 12 S R 1/4
S	630	12	M 20 x 1,5	G 3/8 A	33	17	12	22	24	GE 12 S R
S	630	12	M 20 x 1,5	G 1/2 A	34	17,5	14	27	24	GE 12 S R 1/2
S	630	12	M 20 x 1,5	G 3/4 A	36	19,5	16	32	24	GE 12 S R 3/4
S	630	14	M 22 x 1,5	G 1/4 A	36	18	12	24	27	GE 14 S R 1/4
S	630	14	M 22 x 1,5	G 3/8 A	37	18,5	12	24	27	GE 14 S R 3/8
S	630	14	M 22 x 1,5	G 1/2 A	37	19	14	27	27	GE 14 S R
S	630	14	M 22 x 1,5	G 3/4 A	39	21	16	32	27	GE 14 S R 3/4
S	500	16	M 24 x 1,5	G 1/4 A	36	17,5	14	27	30	GE 16 S R 1/4
S	500	16	M 24 x 1,5	G 3/8 A	36	18	16	32	30	GE 16 S R 3/8
S	500	16	M 24 x 1,5	G 1/2 A	37	18,5	14	27	30	GE 16 S R
S	500	16	M 24 x 1,5	G 3/4 A	39	20,5	16	32	30	GE 16 S R 3/4
S	400	20	M 30 x 2	G 1/2 A	42	20,5	14	32	36	GE 20 S R 1/2
S	400	20	M 30 x 2	G 3/4 A	42	20,5	16	32	36	GE 20 S R
S	400	20	M 30 x 2	G 1 A	44	22,5	18	41	36	GE 20 S R 1
S	400	25	M 36 x 2	G 1/2 A	47	23	14	41	46	GE 25 S R 1/2
S	400	25	M 36 x 2	G 3/4 A	47	23	16	41	46	GE 25 S R 3/4
S	400	25	M 36 x 2	G 1 A	47	23	18	41	46	GE 25 S R
S	400	25	M 36 x 2	G 1 1/4 A	47	23	20	50	46	GE 25 S R 1 1/4
S	400	25	M 36 x 2	G 1 1/2 A	45	21	22	55	46	GE 25 S R 1 1/2
S	400	30	M 42 x 2	G 3/4 A	50	23,5	16	46	50	GE 30 S R 3/4
S	400	30	M 42 x 2	G 1 A	50	23,5	18	46	50	GE 30 S R 1
S	400	30	M 42 x 2	G 1 1/4 A	50	23,5	20	50	50	GE 30 S R
S	400	30	M 42 x 2	G 1 1/2 A	50	23,5	22	55	50	GE 30 S R 1 1/2
S	315	38	M 52 x 2	G 1 A	57	26	18	55	60	GE 38 S R 1
S	315	38	M 52 x 2	G 1 1/4 A	57	26	20	55	60	GE 38 S R 1 1/4
S	315	38	M 52 x 2	G 1 1/2 A	57	26	22	55	60	GE 38 S R

☆ All Diamention in Millimeters
☆ Diamentions give are Approx Fig with tightened nut

WE -R - Male Stud Elbows

ARCO
HYDRAULIC FITTINGS

Thread:
B.S.P.

Fig. 1 – taber

Fig. 2 – parallel (form A – DIN 3852)

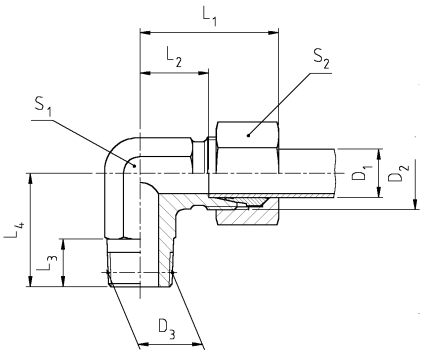

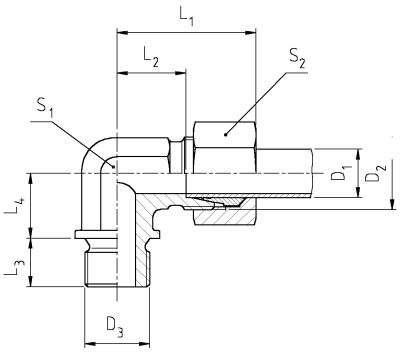

Series	PN (Bar)	D_1	D_2	D_3	L_1 ~	L_2	L_3	L_4	S_1	S_2	Fig.	Order Code
LL	100	4	M 8 x 1	R 1/8 keg.	21	11	8	17	9	10	1	WE 4 LLR
LL	100	5	M 10 x 1	R 1/8 keg.	21	9,5	8	17	9	12	1	WE 5 LLR
LL	100	6	M 10 x 1	R 1/8 keg.	21	9,5	8	17	9	12	1	WE 6 LLR
LL	100	8	M 12 x 1	R 1/8 keg.	25	11,5	8	20	12	14	1	WE 8 LLR
L	315	6	M 12 x 1,5	R 1/8 keg.	27	12	8	20	12	14	1	WE 6 LR
L	315	8	M 14 x 1,5	R 1/4 keg.	29	14	12	26	12	17	1	WE 8 LR
L	315	10	M 16 x 1,5	R 1/4 keg.	30	15	12	27	14	19	1	WE 10 LR
L	315	12	M 18 x 1,5	R 3/8 keg.	32	17	12	28	17	22	1	WE 12 LR
L	315	15	M 22 x 1,5	R 1/2 keg.	36	21	16	34	19	27	1	WE 15 LR
L	315	18	M 26 x 1,5	R 1/2 keg.	40	23,5	14	36	24	32	1	WE 18 LR
L	160	22	M 30 x 2	G 3/4 A	44	27,5	16	26	27	36	2	WE 22 LR
L	160	28	M 36 x 2	G 1 A	47	30,5	18	30	36	41	2	WE 28 LR
L	160	35	M 45 x 2	G 1 1/4 A	56	34,5	20	34	41	50	2	WE 35 LR
L	160	42	M 52 x 2	G 1 1/2 A	63	40	22	39	50	60	2	WE 42 LR
S	630	6	M 14 x1,5	R 1/4 keg.	31	16	12	26	12	17	1	WE 6 SR
S	630	8	M 16 x1,5	R 1/4 keg.	32	17	15	27	14	19	1	WE 8 SR
S	630	10	M 18 x1,5	R 3/8 keg.	34	17,5	12	28	17	22	1	WE 10 SR
S	630	12	M 20 x1,5	R 3/8 keg.	38	21,5	12	28	22	24	1	WE 12 SR
S	630	14	M 22 x1,5	R 1/2 keg.	40	22	14	32	19	27	1	WE 14 SR
S	500	16	M 24 x1,5	R 1/2 keg.	43	24,5	14	32	24	30	1	WE 16 SR
S	400	20	M 30 x 2	G 3/4 A	48	26,5	16	26	27	36	2	WE 20 SR
S	400	25	M 36 x 2	G 1 A	54	30	18	30	36	46	2	WE 25 SR
S	400	30	M 42 x 2	G 1 1/4 A	62	35,5	20	34	41	50	2	WE 30 SR
S	315	38	M 52 x 2	G 1 1/2 A	72	41	22	39	50	60	2	WE 38 SR

☆ All Diamention in Millimeters
☆ Diamentions give are Approx Fig with tightened nut

TE -R - Male Stud Branch Tees

ARCO
HYDRAULIC FITTINGS

Thread:
B.S.P.

Fig. 1 – taber
Fig. 2 – parallel (form A – DIN 3852)

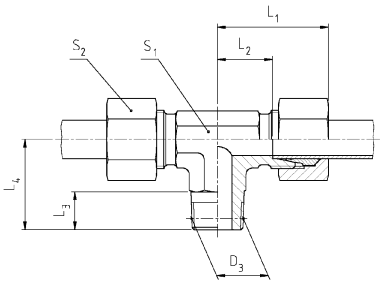

Fig. 1

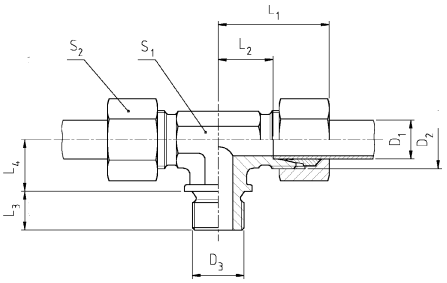

Fig. 2

* siehe Seite 6
* see page 6

Series	PN (Bar)	D_1	D_2	D_3	L_1 ~	L_2	L_3	L_4	S_1	S_2	Fig.	Order Code
LL	100	4	M 8 x 1	R 1/8 keg.	21	11	8	17	9	10	1	TE 4 LL R
LL	100	5	M 10 x 1	R 1/8 keg.	21	9,5	8	17	9	12	1	TE 5 LL R
LL	100	6	M 10 x 1	R 1/8 keg.	21	9,5	8	17	9	12	1	TE 6 LL R
LL	100	8	M 12 x 1	R 1/8 keg.	27	13,5	8	20	12	14	1	TE 8 LL R
L	315	6	M 12 x 1,5	R 1/8 keg.	27	12	8	20	12	14	1	TE 6 L R
L	315	8	M 14 x 1,5	R 1/4 keg.	29	14	12	26	12	17	1	TE 8 L R
L	315	10	M 16 x 1,5	R 1/4 keg.	30	15	12	27	14	19	1	TE 10 L R
L	315	12	M 18 x 1,5	R 3/8 keg.	32	17	12	28	17	22	1	TE 12 L R
L	315	15	M 22 x 1,5	R 1/2 keg.	36	21	14	34	19	27	1	TE 15 L R
L	315	18	M 26 x 1,5	R 1/2 keg.	40	23,5	14	36	24	32	1	TE 18 L R
L	160	22	M 30 x 2	G 3/4 A	44	27,5	16	26	27	36	2	TE 22 L R
L	160	28	M 36 x 2	G 1 A	47	30,5	18	30	36	41	2	TE 28 L R
L	160	35	M 45 x 2	G 1 1/4 A	56	34,5	20	34	41	50	2	TE 35 L R
L	160	42	M 52 x 2	G 1 1/2 A	63	40	22	39	50	60	2	TE 42 L R
S	630	6	M 14 x 1,5	R 1/4 keg.	31	16	12	26	12	17	1	TE 6 S R
S	630	8	M 16 x 1,5	R 1/4 keg.	32	17	12	27	14	19	1	TE 8 S R
S	630	10	M 18 x 1,5	R 3/8 keg.	34	17,5	12	28	17	22	1	TE 10 S R
S	630	12	M 20 x 1,5	R 3/8 keg.	38	21,5	12	28	17	24	1	TE 12 S R
S	630	14	M 22 x 1,5	R 1/2 keg.	40	22	14	32	19	27	1	TE 14 S R
S	500	16	M 24 x 1,5	R 1/2 keg.	43	24,5	14	32	24	30	1	TE 16 S R
S	400	20	M 30 x 2	G 3/4 A	48	26,5	16	26	27	36	2	TE 20 S R
S	400	25	M 36 x 2	G 1 A	54	30	18	30	36	46	2	TE 25 S R
S	400	30	M 42 x 2	G 1 1/4 A	62	35,5	20	34	41	50	2	TE 30 S R
S	315	38	M 52 x 2	G 1 1/2 A	72	41	22	39	50	60	2	TE 38 S R

☆ All Diamention in Millimeters
☆ Diamentions give are Approx Fig with tightened nut

LE -R - Male Stud Barrel Tees (Run Tees)

ARCO
HYDRAULIC FITTINGS

Thread:
B.S.P.

Fig. 1 – taber
Fig. 2 – parallel (form A – DIN 3852)

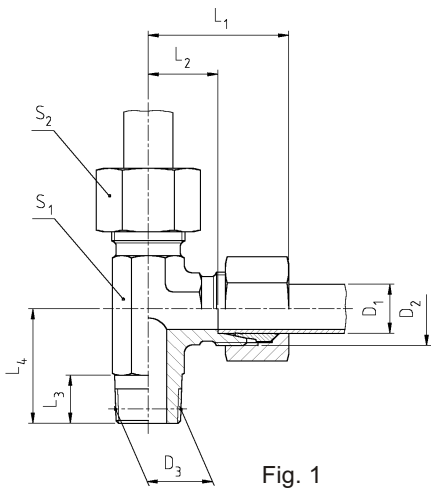

Fig. 1

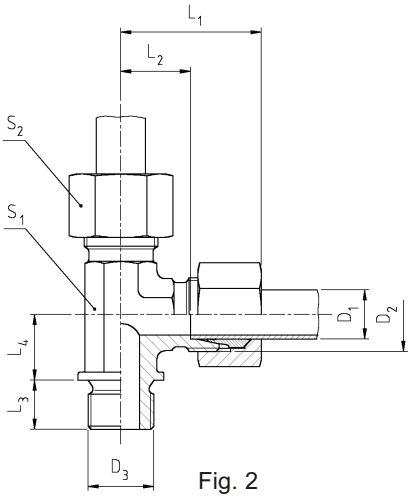

Fig. 2

Series	PN (Bar)	D_1	D_2	D_3	L_1 ~	L_2	L_3	L_4	S_1	S_2	Fig.	Order Code
LL	100	4	M 8 x 1	R 1/8 keg.	21	11	8	17	9	10	1	LE 4 LLR
LL	100	5	M 10 x 1	R 1/8 keg.	21	9,5	8	17	9	12	1	LE 5 LLR
LL	100	6	M 10 x 1	R 1/8 keg.	21	9,5	8	17	9	12	1	LE 6 LLR
LL	100	8	M 12 x 1	R 1/8 keg.	23	11,5	8	20	12	14	1	LE 8 LLR
L	315	6	M 12 x 1,5	R 1/8 keg.	27	12	8	20	12	14	1	LE 6 LR
L	315	8	M 14 x 1,5	R 1/4 keg.	29	14	12	26	12	17	1	LE 8 LR
L	315	10	M 16 x 1,5	R 1/4 keg.	30	15	12	27	14	19	1	LE 10 LR
L	315	12	M 18 x 1,5	R 3/8 keg.	32	17	12	28	17	22	1	LE 12 LR
L	315	15	M 22 x 1,5	R 1/2 keg.	36	21	16	34	19	27	1	LE 15 LR
L	315	18	M 26 x 1,5	R 1/2 keg.	40	23,5	16	36	24	32	1	LE 18 LR
L	160	22	M 30 x 2	G 3/4 A	44	27,5	16	26	27	36	2	LE 22 LR
L	160	28	M 36 x 2	G 1 A	47	33,5	18	30	41	41	2	LE 28 LR
S	630	6	M 14 x 1,5	R 1/4 keg.	31	16	12	26	12	17	1	LE 6 SR
S	630	8	M 16 x 1,5	R 1/4 keg.	32	17	12	27	14	19	1	LE 8 SR
S	630	10	M 18 x 1,5	R 3/8 keg.	34	17,5	12	28	17	22	1	LE 10 SR
S	630	12	M 20 x 1,5	R 3/8 keg.	38	21,5	12	28	17	24	1	LE 12 SR
S	630	14	M 22 x 1,5	R 1/2 keg.	40	22	14	32	19	27	1	LE 14 SR
S	500	16	M 24 x 1,5	R 1/2 keg.	43	24,5	14	32	24	30	1	LE 16 SR
S	400	20	M 30 x 2	G 3/4 A	48	26,5	16	26	27	36	2	LE 20 SR

☆ All Diamention in Millimeters
☆ Diamentions give are Approx Fig with tightened nut

GAI-R Female Stud Couplings

ARCO
HYDRAULIC FITTINGS

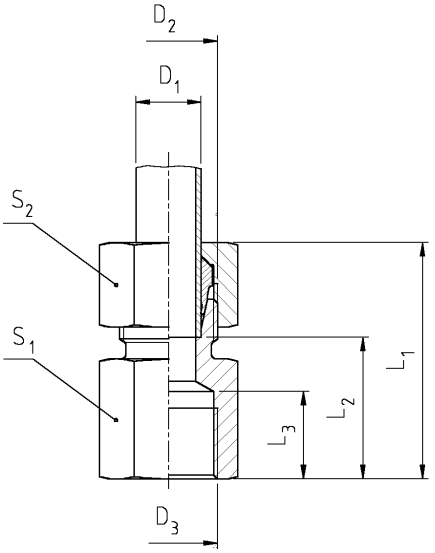

Thread:
B.S.P.
parallel

Series	D_1	D_3	L_2	L_3	L_1	S_1	S_2	Order code*	PN(Bar)1)
L[3])	06	G1/8	19.0	12.0	34	14	14	GAI 06LR	315
	06	G1/4	24.0	17.0	39	19	14	GAI 06LR1/4	315
	08	G1/4	24.0	17.0	39	19	17	GAI 08LR	315
	08	G3/8	25.0	17.0	40	24	17	GAI 08LR3/8	315
	08	G1/2	29.0	20.0	44	27	17	GAI 08LR1/2	315
	10	G1/4	25.0	17.0	40	19	19	GAI 10LR	315
	10	G3/8	26.0	17.0	41	24	19	GAI 10LR3/8	315
	10	G1/2	30.0	20.0	45	27	19	GAI 10LR1/2	315
	12	G3/8	26.0	17.0	41	24	22	GAI 12LR	315
	12	G1/2	30.0	20.0	45	27	22	GAI 12LR1/2	315
	15	G1/2	31.0	20.0	46	27	27	GAI 15LR	315
	18	G1/2	30.5	20.0	47	27	32	GAI 18LR	315
	18	G3/8	26.5	17.0	43	27	32	GAI 18LR3/8	315
	22	G3/4	35.5	22.0	52	36	36	GAI 22LR	160
	28	G1	38.0	24.0	55	41	41	GAI 28LR	160
	35	G11/4	41.0	26.5	63	55	50	GAI 35LR	160
	42	G11/2	42.5	28.5	65	60	60	GAI 42LR	160
S[4])	06	G1/4	26.0	17.0	41	19	17	GAI 06SR	400
	08	G1/4	26.0	17.0	41	19	19	GAI 08SR	400
	10	G3/8	26.5	17.0	43	24	22	GAI 10SR	400
	12	G3/8	26.5	17.0	43	24	24	GAI 12SR	400
	12	G1/2	30.5	20.0	47	30	24	GAI 12SR1/2	400
	14	G1/2	32.0	20.0	50	30	27	GAI 14SR	400
	16	G1/2	31.5	20.0	50	30	30	GAI 16SR	400
	20	G3/4	34.5	22.0	56	36	36	GAI 20SR	315
	25	G1	37.5	24.5	62	41	46	GAI 25SR	315
	30	G11/4	42.0	26.5	69	55	50	GAI 30SR	315
	38	G11/2	43.5	28.5	74	60	60	GAI 38SR	250

☆ All Diamention in Millimeters
☆ Diamentions give are Approx Fig with tightened nut

MAV- Pressure Gauge Couplings

ARCO
HYDRAULIC FITTINGS

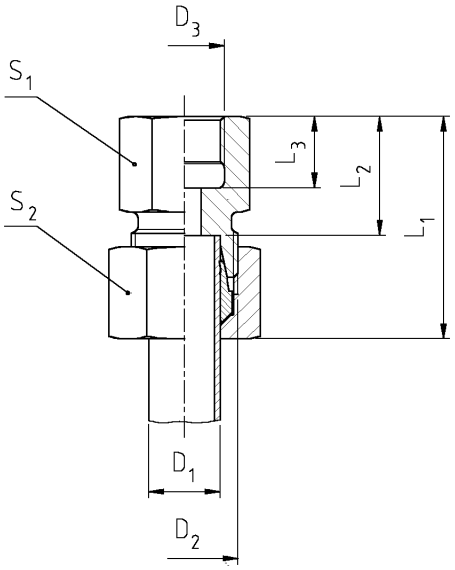

Thread:
B.S.P.
parallel

Series	PN (Bar)	D_1	D_2	D_3	L_1 ~	L_2	L_3	S_1	S_2	Order Code
L	315	6	M 12 x 1,5	G 1/4	34	19	12	17	14	MAV 6 L
L	315	8	M 14 x 1,5	G 1/4	35	19	12	17	17	MAV 8 L
L	315	10	M 16 x 1,5	G 1/4	35	20	12	17	19	MAV 10 L
L	315	12	M 18 x 1,5	G 1/4	35	20	12	19	22	MAV 12 L
S	630	6	M 14 x 1,5	G 1/2	41	26	14	27	17	MAV 6 S
S	630	8	M 16 x 1,5	G 1/2	41	26	14	27	19	MAV 8 S
S	630	10	M 18 x 1,5	G 1/2	42	25,5	14	27	22	MAV 10 S
S	630	12	M 20 x 1,5	G 1/2	42	25,5	14	27	24	MAV 12 S

☆ All Diamention in Millimeters
☆ Diamentions give are Approx Fig with tightened nut

EVGE-R Stud / Standpipe Adaptors

ARCO
HYDRAULIC FITTINGS

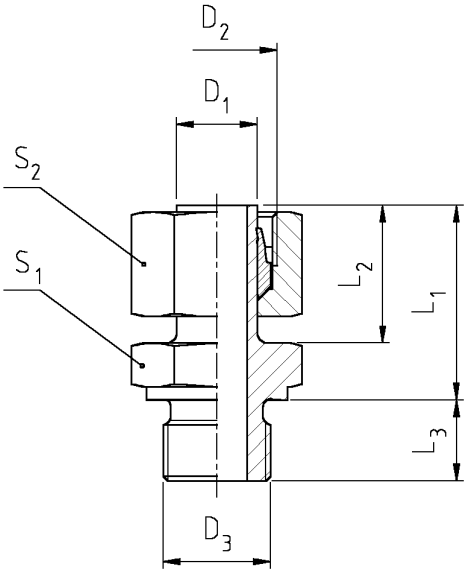

Thread:
B.S.P.
parallel

Series	PN (Bar)	D_1	D_2	D_3	L_1	L_2	L_3	S_1	S_2	Order code
L	315	6	M 12 x 1,5	G 1/8 A	24,5	19,5	8	14	14	EVGE 6 L R
L	315	6	M 14 x 1,5	G 1/4 A	28	19,5	12	19	14	EVGE 6 L R 1/4
L	315	8	M 14 x 1,5	G 1/4 A	29	20,5	12	19	17	EVGE 8 L R
L	315	10	M 16 x 1,5	G 1/4 A	27,5	20,5	12	19	19	EVGE 10 L R
L	315	12	M 18 x 1,5	G 1/4 A	27,5	21,5	12	19	22	EVGE 12 L R 1/4
L	315	12	M 18 x 1,5	G 3/8 A	34	21,5	12	22	22	EVGE 12 L R
L	315	12	M 18 x 1,5	G 1/2 A	34,5	21,5	14	27	22	EVGE 12 L R 1/2
L	315	15	M 26 x 1,5	G 3/8 A	31,5	21	12	22	27	EVGE 15 L R 3/8
L	315	15	M 22 x 1,5	G 1/2 A	31,5	21	14	27	27	EVGE 15 L R
L	315	18	M 26 x 1,5	G 1/2 A	32	22	14	27	32	EVGE 18 L R
L	160	22	M 30 x 2	G 3/4 A	32,5	23	16	32	36	EVGE 22 L R
L	160	28	M 36 x 2	G 1 A	34,5	24	18	41	41	EVGE 28 L R
L	160	35	M 45 x 2	G 1 1/4 A	40,5	28	20	50	50	EVGE 35 L R
L	160	42	M 52 x 2	G 1 1/2 A	44	28	22	55	60	EVGE 42 L R
S	630	6	M 14 x 1,5	G 1/4 A	27	19,5	12	19	17	EVGE 6 S R
S	630	8	M 16 x 1,5	G 1/4 A	29	20,5	12	19	19	EVGE 8 S R
S	630	10	M 18 x 1,5	G 3/8 A	31,5	21,5	12	22	22	EVGE 10 S R
S	630	12	M 20 x 1,5	G 1/4 A	27,5	21,5	12	19	24	EVGE 12 S R 1/4
S	630	12	M 20 x 1,5	G 3/8 A	34	21,5	12	22	24	EVGE 12 S R
S	630	12	M 20 x 1,5	G 1/2 A	34,5	21,5	14	27	24	EVGE 12 S R 1/2
S	630	14	M 22 x 1,5	G 1/2 A	36,5	22,5	14	27	27	EVGE 14 S R
S	500	16	M 24 x 1,5	G 3/8 A	37	24,5	12	22	30	EVGE 16 S R 3/8
S	500	16	M 24 x 1,5	G 1/2 A	36,5	24,5	14	27	30	EVGE 16 S R
S	400	20	M 30 x 2	G 1/2 A	41	28	14	27	36	EVGE 20 S R 1/2
S	400	20	M 30 x 2	G 3/4 A	43	28	16	32	36	EVGE 20 S R
S	400	25	M 36 x 2	G 1 A	48	31,5	18	41	46	EVGE 25 S R
S	400	30	M 42 x 2	G 1 1/4 A	50,5	34	20	50	50	EVGE 30 S R
S	315	38	M 52 x 2	G 1 1/2 A	58	37,5	22	55	60	EVGE 38 S R

☆ All Diamention in Millimeters
☆ Diamentions give are Approx Fig with tightened nut

EGE-R-ED Swivel Connector with Sealing Cone

ARCO
HYDRAULIC FITTINGS

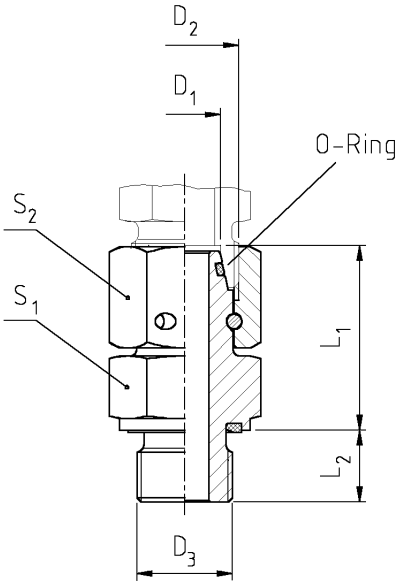

Thread:
B.S.P.
parallel

Series	PN (Bar)	D_1	D_2	D_3	L_1	L_2	S_1	S_2	Oder Code
L	315	6	M 12 x 1,5	G 1/8 A	24,5	8	14	17	EGE 6 LR ED
L	315	8	M 14 x 1,5	G 1/4 A	29,5	12	17	17	EGE 8 LR ED
L	315	10	M 16 x 1,5	G 1/4 A	27,5	12	19	19	EGE 10 LR ED
L	315	12	M 18 x 1,5	G 3/8 A	34	12	22	22	EGE 12 LR ED
L	315	15	M 22 x 1,5	G 1/2 A	32	14	27	27	EGE 15 LR ED
L	315	18	M 26 x 1,5	G 1/2 A	31,5	14	27	32	EGE 18 LR ED
L	160	22	M 30 x 2	G 3/4 A	32,5	16	32	36	EGE 22 LR ED
L	160	28	M 36 x 2	G 1 A	35	18	41	41	EGE 28 LR ED
L	160	35	M 45 x 2	G 1 1/4 A	42,5	20	50	50	EGE 35 LR ED
L	160	42	M 52 x 2	G 1 1/2 A	46,5	22	55	60	EGE 42 LR ED
S	630	6	M 14 x 1,5	G 1/4 A	27	12	19	17	EGE 6 SR ED
S	630	8	M 16 x 1,5	G 1/4 A	29,5	12	19	19	EGE 8 SR ED
S	630	10	M 18 x 1,5	G 3/8 A	32	12	22	22	EGE 10 SR ED
S	630	12	M 20 x 1,5	G 3/8 A	34	12	22	24	EGE 12 SR ED
S	630	14	M 22 x 1,5	G 1/2 A	36,5	14	27	27	EGE 14 SR ED
S	500	16	M 24 x 1,5	G 1/2 A	37	14	27	30	EGE 16 SR ED
S	400	20	M 30 x 2	G 3/4 A	43	16	32	36	EGE 20 SR ED
S	400	25	M 36 x 2	G 1 A	48	18	41	46	EGE 25 SR ED
S	400	30	M 42 x 2	G 1 1/4 A	51	20	50	50	EGE 30 SR ED
S	315	38	M 52 x 2	G 1 1/2 A	60	22	55	60	EGE 38 SR ED

☆ All Diamention in Millimeters
☆ Diamentions give are Approx Fig with tightened nut

EVW- Swivel Elbows

ARCO
HYDRAULIC FITTINGS

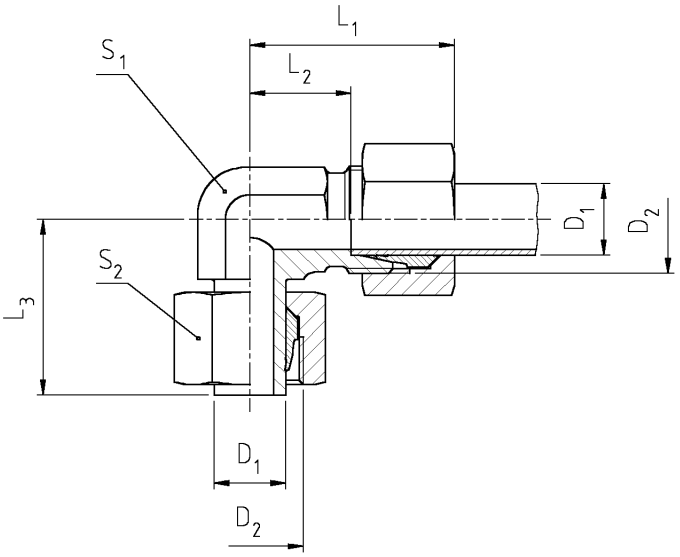

Series	PN (Bar)	D_1	D_2	L_1 ~	L_2	L_3	S_1	S_2	Order Code
L	315	6	M 12 x 1,5	27	12	26	12	14	EVW 6 L
L	315	8	M 14 x 1,5	29	14	27,5	12	17	EVW 8 L
L	315	10	M 16 x 1,5	30	15	29	14	19	EVW 10 L
L	315	12	M 18 x 1,5	32	17	29,5	17	22	EVW 12 L
L	315	15	M 22 x 1,5	36	21	32,5	19	27	EVW 15 L
L	315	18	M 26 x 1,5	40	23,5	35,5	24	32	EVW 18 L
L	160	22	M 30 x 2	44	27,5	38,5	27	36	EVW 22 L
L	160	28	M 36 x 2	47	30,5	41,5	36	41	EVW 28 L
L	160	35	M 45 x 2	56	34,5	51	41	50	EVW 35 L
L	160	42	M 52 x 2	63	40	56	50	60	EVW 42 L
S	630	6	M 14 x 1,5	31	16	27	12	17	EVW 6 S
S	630	8	M 16 x 1,5	32	17	27,5	14	19	EVW 8 S
S	630	10	M 18 x 1,5	34	17,5	30	17	22	EVW 10 S
S	630	12	M 20 x 1,5	38	21,5	30	17	24	EVW 12 S
S	630	14	M 22 x 1,5	40	22	35	19	27	EVW 14 S
S	500	16	M 24 x 1,5	43	24,5	36,5	24	30	EVW 16 S
S	400	20	M 30 x 2	47	26,5	44,5	27	36	EVW 20 S
S	400	25	M 36 x 2	54	30	50	36	46	EVW 25 S
S	400	30	M 42 x 2	62	35,5	55	41	50	EVW 30 S
S	315	38	M 52 x 2	72	41	63	50	60	EVW 38 S

☆ All Diamention in Millimeters
☆ Diamentions give are Approx Fig with tightened nut

EVW- R Swivel Elbows Connector

ARCO
HYDRAULIC FITTINGS

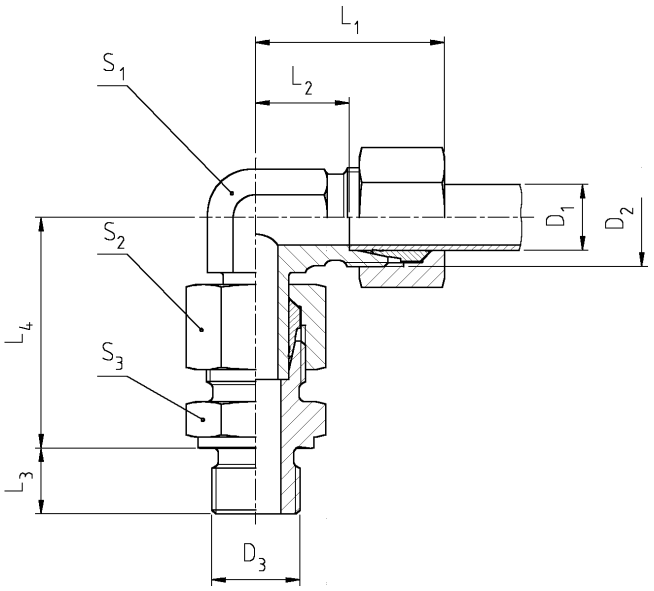

Thread:
B.S.P.
parallel

Series	PN (Bar)	D_1	D_2	D_3	L_1 ~	L_2	L_3	L_4	S_1	S_2	S_3	Order Code
L	315	6	M 12 x 1,5	G 1/8 A	27	12	8	34,5	12	14	14	EVW 6 LR
L	315	8	M 14 x 1,5	G 1/4 A	29	14	12	37,5	12	17	19	EVW 8 LR
L	315	10	M 16 x 1,5	G 1/4 A	30	15	12	40	14	19	19	EVW 10 LR
L	315	12	M 18 x 1,5	G 3/8 A	32	17	12	42	17	22	22	EVW 12 LR
L	315	15	M 22 x 1,5	G 1/2 A	36	21	14	46,5	19	27	27	EVW 15 LR
L	315	18	M 26 x 1,5	G 1/2 A	40	23,5	14	50	24	32	27	EVW 18 LR
L	160	22	M 30 x 2	G 3/4 A	44	27,5	16	55	27	36	32	EVW 22 LR
L	160	28	M 36 x 2	G 1 A	47	30,5	18	59	36	41	41	EVW 28 LR
L	160	35	M 45 x 2	G 1 1/4 A	56	34,5	20	68,5	41	50	50	EVW 35 LR
L	160	42	M 52 x 2	G 1 1/2 A	63	40	22	75	50	60	55	EVW 42 LR
S	630	6	M 14 x 1,5	G 1/4 A	31	16	12	40	12	17	19	EVW 6 SR
S	630	8	M 16 x 1,5	G 1/4 A	32	17	12	42,5	14	19	19	EVW 8 SR
S	630	10	M 18 x 1,5	G 3/8 A	34	17,5	12	45	17	22	22	EVW 10 SR
S	630	12	M 20 x 1,5	G 3/8 A	38	21,5	12	48	17	24	22	EVW 12 SR
S	630	14	M 22 x 1,5	G 1/2 A	40	22	14	54	19	27	27	EVW 14 SR
S	500	16	M 24 x 1,5	G 1/2 A	43	24,5	14	55	24	30	27	EVW 16 SR
S	400	20	M 30 x 2	G 3/4 A	47	26,5	16	65	27	36	32	EVW 20 SR
S	400	25	M 36 x 2	G 1 A	54	30	18	73	36	46	41	EVW 25 SR
S	400	30	M 42 x 2	G 1 1/4 A	62	35,5	20	78,5	41	50	50	EVW 30 SR
S	315	38	M 52 x 2	G 1 1/2 A	72	41	22	89	50	60	55	EVW 38 SR

☆All Diamention in Millimeters
☆Diamentions give are Approx Fig with tightened nut

EVT- Swivel Branch Tees

ARCO
HYDRAULIC FITTINGS

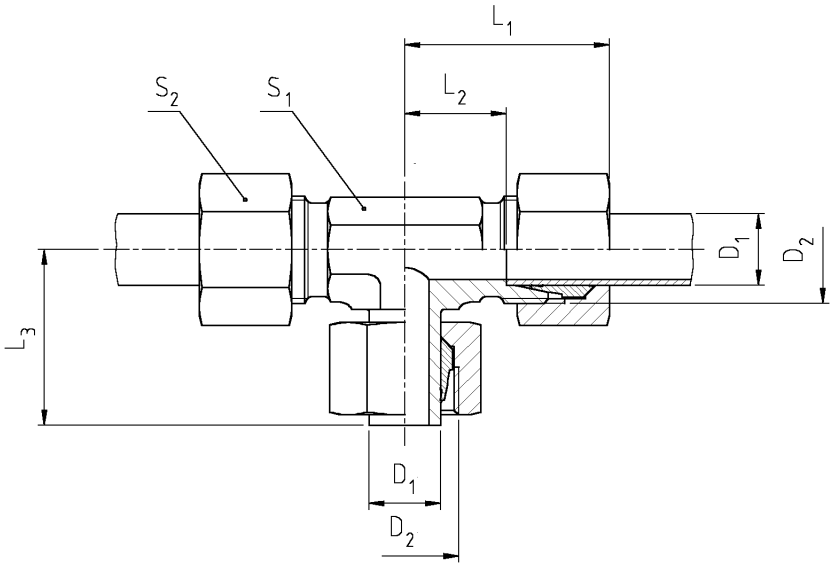

Series	PN (Bar)	D_1	D_2	L_1 ~	L_2	L_3	S_1	S_2	Order Code
L	315	6	M 12 x 1,5	27	12	26	12	14	EVT 6 L
L	315	8	M 14 x 1,5	29	14	27,5	12	17	EVT 8 L
L	315	10	M 16 x 1,5	30	15	29	14	19	EVT 10 L
L	315	12	M 18 x 1,5	32	17	29,5	17	22	EVT 12 L
L	315	15	M 22 x 1,5	36	21	32,5	19	27	EVT 15 L
L	315	18	M 26 x 1,5	40	23,5	35,5	24	32	EVT 18 L
L	160	22	M 30 x 2	44	27,5	38,5	27	36	EVT 22 L
L	160	28	M 36 x 2	47	30,5	41,5	36	41	EVT 28 L
L	160	35	M 45 x 2	56	34,5	51	41	50	EVT 35 L
L	160	42	M 52 x 2	63	40	56	50	60	EVT 42 L
S	630	6	M 14 x 1,5	31	16	27	12	17	EVT 6 S
S	630	8	M 16 x 1,5	32	17	27,5	14	19	EVT 8 S
S	630	10	M 18 x 1,5	34	17,5	30	17	22	EVT 10 S
S	630	12	M 20 x 1,5	38	21,5	31	17	24	EVT 12 S
S	630	14	M 22 x 1,5	40	22	35	19	27	EVT 14 S
S	500	16	M 24 x 1,5	43	24,5	36,5	24	30	EVT 16 S
S	400	20	M 30 x 2	47	26,5	44,5	27	36	EVT 20 S
S	400	25	M 36 x 2	54	30	50	36	46	EVT 25 S
S	400	30	M 42 x 2	62	35,5	55	41	50	EVT 30 S
S	315	38	M 52 x 2	72	41	63	50	60	EVT 38 S

☆ All Diamention in Millimeters
☆ Diamentions give are Approx Fig with tightened nut

EVT- R Swivel Branch Tees Conenector

ARCO
HYDRAULIC FITTINGS

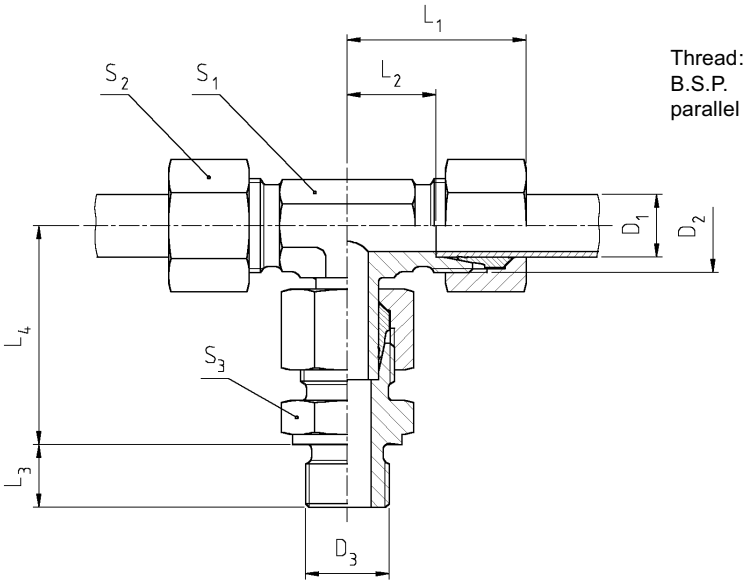

Series	PN (Bar)	D_1	D_2	D_3	L_1 ~	L_2	L_3	L_4	S_1	S_2	S_3	Order Code
L	315	6	M 12 x 1,5	G 1/8 A	27	12	8	34,5	12	14	14	EVT 6 LR
L	315	8	M 14 x 1,5	G 1/4 A	29	14	12	37,5	12	17	19	EVT 8 LR
L	315	10	M 16 x 1,5	G 1/4 A	30	15	12	40	14	19	19	EVT 10 LR
L	315	12	M 18 x 1,5	G 3/8 A	32	17	12	42	17	22	22	EVT 12 LR
L	315	15	M 22 x 1,5	G 1/2 A	36	21	14	46,5	19	27	27	EVT 15 LR
L	315	18	M 26 x 1,5	G 1/2 A	40	23,5	14	50	24	32	27	EVT 18 LR
L	160	22	M 30 x 2	G 3/4 A	44	27,5	16	55	27	36	32	EVT 22 LR
L	160	28	M 36 x 2	G 1 A	47	30,5	18	59	36	41	41	EVT 28 LR
L	160	35	M 45 x 2	G 1 1/4 A	56	34,5	20	68,5	41	50	50	EVT 35 LR
L	160	42	M 52 x 2	G 1 1/2 A	63	40	22	75	50	60	55	EVT 42 LR
S	630	6	M 14 x 1,5	G 1/4 A	31	16	12	40	12	17	19	EVT 6 SR
S	630	8	M 16 x 1,5	G 1/4 A	32	17	12	42,5	14	19	19	EVT 8 SR
S	630	10	M 18 x 1,5	G 3/8 A	34	17,5	12	45	17	22	22	EVT 10 SR
S	630	12	M 20 x 1,5	G 3/8 A	38	21,5	12	48	17	24	22	EVT 12 SR
S	630	14	M 22 x 1,5	G 1/2 A	40	22	14	54	19	27	27	EVT 14 SR
S	500	16	M 24 x 1,5	G 1/2 A	43	24,5	14	55	24	30	27	EVT 16 SR
S	400	20	M 30 x 2	G 3/4 A	47	26,5	16	65	27	36	32	EVT 20 SR
S	400	25	M 36 x 2	G 1 A	54	30	18	73	36	46	41	EVT 25 SR
S	400	30	M 42 x 2	G 1 1/4 A	62	35,5	20	78,5	41	50	50	EVT 30 SR
S	315	38	M 52 x 2	G 1 1/2 A	72	41	22	89	50	60	55	EVT 38 SR

☆ All Diamention in Millimeters
☆ Diamentions give are Approx Fig with tightened nut

EVL- Swivel Barrel Tees (Run Tees)

ARCO
HYDRAULIC FITTINGS

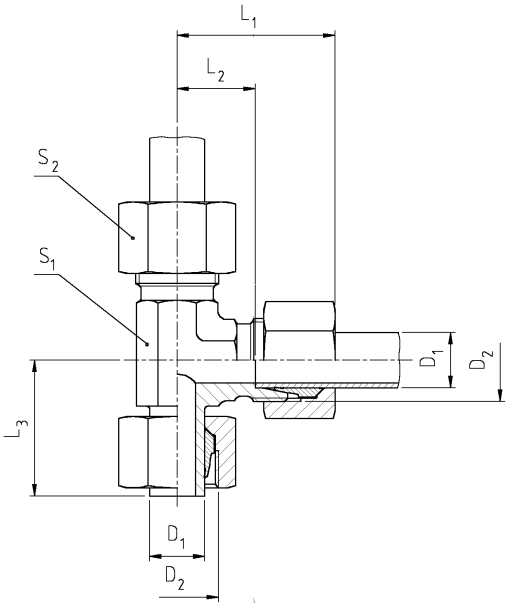

Series	PN (Bar)	D_1	D_2	L_1 ~	L_2	L_3	S_1	S_2	Order Code
L	315	6	M 12 x 1,5	27	12	26,5	12	14	EVL 6 L
L	315	8	M 14 x 1,5	29	14	27,5	12	17	EVL 8 L
L	315	10	M 16 x 1,5	30	15	29	14	19	EVL 10 L
L	315	12	M 18 x 1,5	32	17	29,5	17	22	EVL 12 L
L	315	15	M 22 x 1,5	36	21	32,5	19	27	EVL 15 L
L	315	18	M 26 x 1,5	40	23,5	35,5	24	32	EVL 18 L
L	160	22	M 30 x 2	44	27,5	38,5	27	36	EVL 22 L
L	160	28	M 36 x 2	47	30,5	41,5	36	41	EVL 28 L
L	160	35	M 45 x 2	56	34,5	51	41	50	EVL 35 L
L	160	42	M 52 x 2	63	40	56	50	60	EVL 42 L
S	630	6	M 14 x 1,5	31	16	27	12	17	EVL 6 S
S	630	8	M 16 x 1,5	32	17	27,5	14	19	EVL 8 S
S	630	10	M 18 x 1,5	34	17,5	30	17	22	EVL 10 S
S	630	12	M 20 x 1,5	38	21,5	31	17	24	EVL 12 S
S	630	14	M 22 x 1,5	40	22	35	19	27	EVL 14 S
S	500	16	M 24 x 1,5	43	24,5	36,5	24	30	EVL 16 S
S	400	20	M 30 x 2	47	26,5	44,5	27	36	EVL 20 S
S	400	25	M 36 x 2	54	30	50	36	46	EVL 25 S
S	400	30	M 42 x 2	62	35,5	55	41	50	EVL 30 S
S	315	38	M 52 x 2	72	41	63	50	60	EVL 38 S

☆ All Diamention in Millimeters
☆ Diamentions give are Approx Fig with tightened nut

EVLR- Swivel Barrel Tees (Run Tees) Connector

ARCO
HYDRAULIC FITTINGS

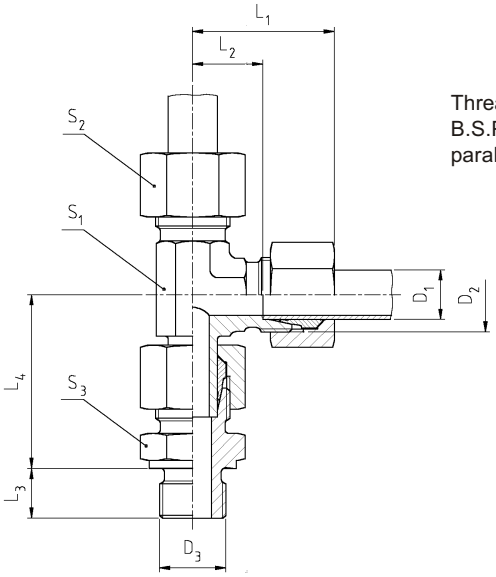

Thread:
B.S.P.
parallel

Series	PN (Bar)	D_1	D_2	D_3	L_1 ~	L_2	L_3	L_4	S_1	S_2	S_3	Order Code
L	315	6	M 12 x 1,5	G 1/8 A	27	12	8	34,5	12	14	14	EVL 6 LR
L	315	8	M 14 x 1,5	G 1/4 A	29	14	12	37,5	12	17	19	EVL 8 LR
L	315	10	M 16 x 1,5	G 1/4 A	30	15	12	40	14	19	19	EVL 10 LR
L	315	12	M 18 x 1,5	G 3/8 A	32	17	12	42	17	22	22	EVL 12 LR
L	315	15	M 22 x 1,5	G 1/2 A	36	21	14	46,5	19	27	27	EVL 15 LR
L	315	18	M 26 x 1,5	G 1/2 A	40	23,5	14	50	24	32	27	EVL 18 LR
L	160	22	M 30 x 2	G 3/4 A	44	27,5	16	55	27	36	32	EVL 22 LR
L	160	28	M 36 x 2	G 1 A	47	30,5	18	59	36	41	41	EVL 28 LR
L	160	35	M 45 x 2	G 1 1/4 A	56	34,5	20	68,5	41	50	50	EVL 35 LR
L	160	42	M 52 x 2	G 1 1/2 A	63	40	22	75	50	60	55	EVL 42 LR
S	630	6	M 14 x 1,5	G 1/4 A	31	16	12	40	12	17	19	EVL 6 SR
S	630	8	M 16 x 1,5	G 1/4 A	32	17	12	42,5	14	19	19	EVL 8 SR
S	630	10	M 18 x 1,5	G 3/8 A	34	17,5	12	45	17	22	22	EVL 10 SR
S	630	12	M 20 x 1,5	G 3/8 A	38	21,5	12	48	17	24	22	EVL 12 SR
S	630	14	M 22 x 1,5	G 1/2 A	40	22	14	54	19	27	27	EVL 14 SR
S	500	16	M 24 x 1,5	G 1/2 A	43	24,5	14	55	24	30	27	EVL 16 SR
S	400	20	M 30 x 2	G 3/4 A	47	26,5	16	65	27	36	32	EVL 20 SR
S	400	25	M 36 x 2	G 1 A	54	30	18	73	36	46	41	EVL 25 SR
S	400	30	M 42 x 2	G 1 1/4 A	62	35,5	20	78,5	41	50	50	EVL 30 SR
S	315	38	M 52 x 2	G 1 1/2 A	72	41	22	89	50	60	55	EVL 38 SR

☆ All Diamention in Millimeters
☆ Diamentions give are Approx Fig with tightened nut

EW- Swivel Elbows with Sealing Cone

ARCO
HYDRAULIC FITTINGS

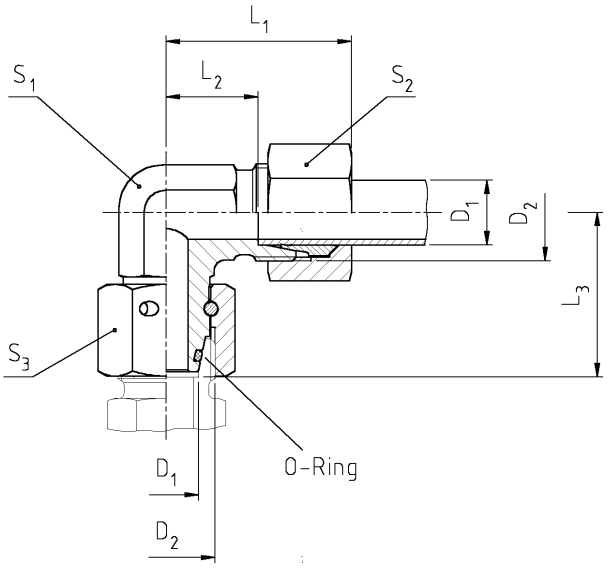

Series	PN (Bar)	D_1	D_2	L_1 ~	L_2	L_3	S_1	S_2	S_3	Order Code
L	315	6	M 12 x 1,5	27	12	26	12	14	17	EW 6 L
L	315	8	M 14 x 1,5	29	14	27,5	12	17	17	EW 8 L
L	315	10	M 16 x 1,5	30	15	29	14	19	19	EW 10 L
L	315	12	M 18 x 1,5	32	17	29,5	17	22	22	EW 12 L
L	315	15	M 22 x 1,5	36	21	32,5	19	27	27	EW 15 L
L	315	18	M 26 x 1,5	40	23,5	35,5	24	32	32	EW 18 L
L	160	22	M 30 x 2	44	27,5	38,5	27	36	36	EW 22 L
L	160	28	M 36 x 2	47	30,5	41,5	36	41	41	EW 28 L
L	160	35	M 45 x 2	56	34,5	51	41	50	50	EW 35 L
L	160	42	M 52 x 2	63	40	56	50	60	60	EW 42 L
S	630	6	M 14 x 1,5	31	16	27	12	17	17	EW 6 S
S	630	8	M 16 x 1,5	32	17	27,5	14	19	19	EW 8 S
S	630	10	M 18 x 1,5	34	17,5	30	17	22	22	EW 10 S
S	630	12	M 20 x 1,5	38	21,5	31	17	24	24	EW 12 S
S	630	14	M 22 x 1,5	40	22	35	19	27	27	EW 14 S
S	500	16	M 24 x 1,5	43	24,5	36,5	24	30	30	EW 16 S
S	400	20	M 30 x 2	47	26,5	44,5	27	36	36	EW 20 S
S	400	25	M 36 x 2	54	30	50	36	46	46	EW 25 S
S	400	30	M 42 x 2	62	35,5	55	41	50	50	EW 30 S
S	315	38	M 52 x 2	72	41	63	50	60	60	EW 38 S

☆ All Diamention in Millimeters
☆ Diamentions give are Approx Fig with tightened nut

ET- Swivel Branch Tees with Sealing Cone

ARCO
HYDRAULIC FITTINGS

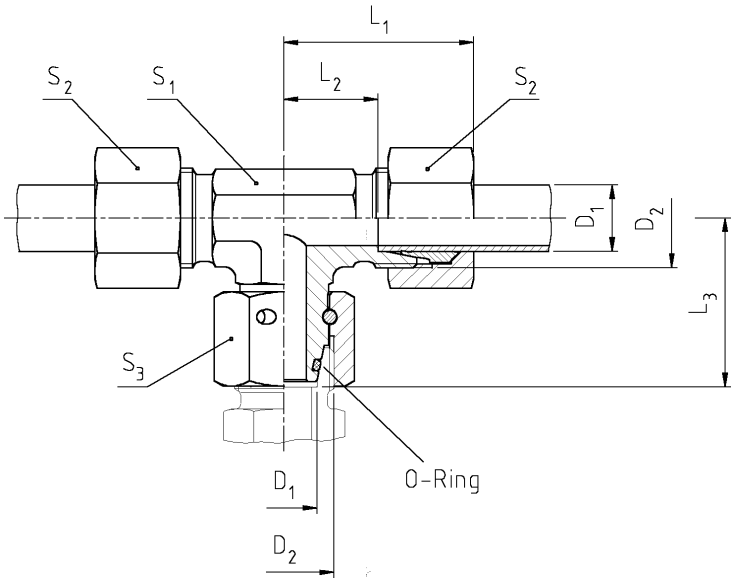

Series	PN (Bar)	D_1	D_2	L_1 ~	L_2	L_3	S_1	S_2	S_3	O-Ring	Order Code
L	315	6	M 12 x 1,5	27	12	26	12	14	17	4 x 1,5	ET 6 L
L	315	8	M 14 x 1,5	29	14	27,5	12	17	17	6 x 1,5	ET 8 L
L	315	10	M 16 x 1,5	30	15	29	14	19	19	8 x 1,5	ET 10 L
L	315	12	M 18 x 1,5	32	17	29,5	17	22	22	10 x 1,5	ET 12 L
L	315	15	M 22 x 1,5	36	21	32,5	19	27	27	12 x 2	ET 15 L
L	315	18	M 26 x 1,5	40	23,5	35,5	24	32	32	15 x 2	ET 18 L
L	160	22	M 30 x 2	44	27,5	38,5	27	36	36	20 x 2	ET 22 L
L	160	28	M 36 x 2	47	30,5	41,5	36	41	41	26 x 2	ET 28 L
L	160	35	M 45 x 2	56	34,5	51	41	50	50	32 x 2,5	ET 35 L
L	160	42	M 52 x 2	63	40	56	50	60	60	39 x 2,5	ET 42 L
S	630	6	M 14 x 1,5	31	16	27	12	17	17	4 x 1,5	ET 6 S
S	630	8	M 16 x 1,5	32	17	27,5	14	19	19	6 x 1,5	ET 8 S
S	630	10	M 18 x 1,5	34	17,5	30	17	22	22	8 x 1,5	ET 10 S
S	630	12	M 20 x 1,5	38	21,5	31	17	24	24	10 x 1,5	ET 12 S
S	630	14	M 22 x 1,5	40	22	35	19	27	27	12 x 2	ET 14 S
S	500	16	M 24 x 1,5	43	24,5	36,5	24	30	30	14 x 2	ET 16 S
S	400	20	M 30 x 2	47	26,5	44,5	27	36	36	17,3 x 2,4	ET 20 S
S	400	25	M 36 x 2	54	30	50	36	46	46	22,3 x 2,4	ET 25 S
S	400	30	M 42 x 2	62	35,5	55	41	50	50	27,3 x 2,4	ET 30 S
S	315	38	M 52 x 2	72	41	63	50	60	60	35 x 2,5	ET 38 S

☆ All Diamention in Millimeters
☆ Diamentions give are Approx Fig with tightened nut

ET - R Swivel Branch Tees Connector with Sealing Cone

ARCO
HYDRAULIC FITTINGS

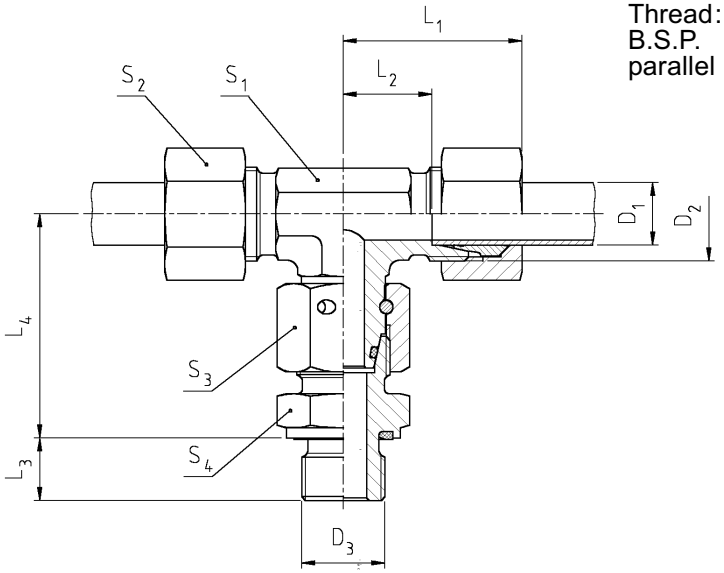

Series	PN (Bar)	D_1	D_2	D_3	L_1 ~	L_2	L_3	L_4	S_1	S_2	S_3	S_4	Order Code
L	315	6	M 12 x1,5	G 1/8 A	27	12	8	34,5	12	14	17	14	ET 6 LR
L	315	8	M 14 x1,5	G 1/4 A	29	14	12	37,5	12	17	17	17	ET 8 LR
L	315	10	M 16 x1,5	G 1/4 A	30	15	12	40	14	19	19	19	ET 10 LR
L	315	12	M 18 x1,5	G 3/8 A	32	17	12	42	17	22	22	22	ET 12 LR
L	315	15	M 22 x1,5	G 1/2 A	36	21	14	46,5	19	27	27	27	ET 15 LR
L	315	18	M 26 x1,5	G 1/2 A	40	23,5	14	50	24	32	32	27	ET 18 LR
L	160	22	M 30 x 2	G 3/4 A	44	27,5	16	55	27	36	36	32	ET 22 LR
L	160	28	M 36 x 2	G 1 A	47	30,5	18	59	36	41	41	41	ET 28 LR
L	160	35	M 45 x 2	G 1 1/4 A	56	34,5	20	68,5	41	50	50	50	ET 35 LR
L	160	42	M 52 x 2	G 1 1/2 A	63	40	22	75	50	60	60	55	ET 42 LR
S	630	6	M 14 x1,5	G 1/4 A	31	16	12	40	12	17	17	17	ET 6 SR
S	630	8	M 16 x1,5	G 1/4 A	32	17	12	42,5	14	19	19	19	ET 8 SR
S	630	10	M 18 x1,5	G 3/8 A	34	17,5	12	45	17	22	22	22	ET 10 SR
S	630	12	M 20 x1,5	G 3/8 A	38	21,5	12	48	17	24	24	22	ET 12 SR
S	630	14	M 22 x1,5	G 1/2 A	40	22	14	54	19	27	27	27	ET 14 SR
S	500	16	M 24 x1,5	G 1/2 A	43	24,5	14	55	24	30	30	27	ET 16 SR
S	400	20	M 30 x 2	G 3/4 A	47	26,5	16	65	27	36	36	32	ET 20 SR
S	400	25	M 36 x 2	G 1 A	54	30	18	73	36	46	46	41	ET 25 SR
S	400	30	M 42 x 2	G 1 1/4 A	62	35,5	20	78,5	41	50	50	50	ET 30 SR
S	315	38	M 52 x 2	G 1 1/2 A	72	41	22	89	50	60	60	55	ET 38 SR

☆ All Diamention in Millimeters
☆ Diamentions give are Approx Fig with tightened nut

EL- Swivel Barrel Tees (Run Tees) with Sealing Cone

ARCO
HYDRAULIC FITTINGS

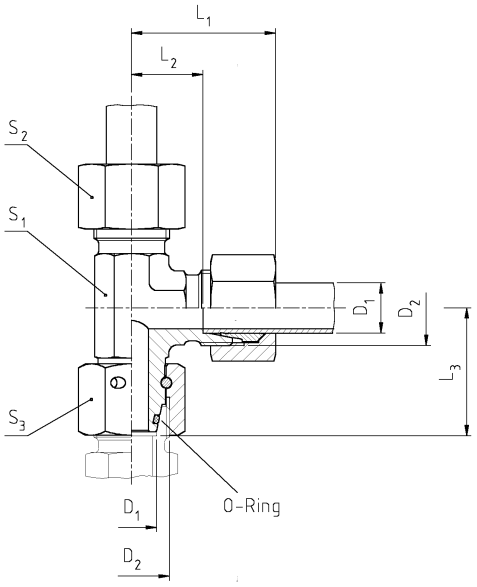

Series	PN (Bar)	D_1	D_2	L_1 ~	L_2	L_3	S_1	S_2	S_3	Order Code
L	315	6	M 12 x 1,5	27	12	26	12	14	17	EL 6 L
L	315	8	M 14 x 1,5	29	14	27,5	12	17	17	EL 8 L
L	315	10	M 16 x 1,5	30	15	29	14	19	19	EL 10 L
L	315	12	M 18 x 1,5	32	17	29,5	17	22	22	EL 12 L
L	315	15	M 22 x 1,5	36	21	32,5	19	27	27	EL 15 L
L	315	18	M 26 x 1,5	40	23,5	35,5	24	32	32	EL 18 L
L	160	22	M 30 x 2	44	27,5	38,5	27	36	36	EL 22 L
L	160	28	M 36 x 2	47	30,5	41,5	36	41	41	EL 28 L
L	160	35	M 45 x 2	56	34,5	51	41	50	50	EL 35 L
L	160	42	M 52 x 2	63	40	56	50	60	60	EL 42 L
S	630	6	M 14 x 1,5	31	16	27	12	17	17	EL 6 S
S	630	8	M 16 x 1,5	32	17	27,5	14	19	19	EL 8 S
S	630	10	M 18 x 1,5	34	17,5	30	17	22	22	EL 10 S
S	630	12	M 20 x 1,5	38	21,5	31	17	24	24	EL 12 S
S	630	14	M 22 x 1,5	40	22	35	19	27	27	EL 14 S
S	500	16	M 24 x 1,5	43	24,5	36,5	24	30	30	EL 16 S
S	400	20	M 30 x 2	47	26,5	44,5	27	36	36	EL 20 S
S	400	25	M 36 x 2	54	30	50	36	46	46	EL 25 S
S	400	30	M 42 x 2	62	35,5	55	41	50	50	EL 30 S
S	315	38	M 52 x 2	72	41	63	50	60	60	EL 38 S

☆ All Diamention in Millimeters
☆ Diamentions give are Approx Fig with tightened nut

EL-R Swivel Barrel (Run) Tees with Sealing Cone

ARCO
HYDRAULIC FITTINGS

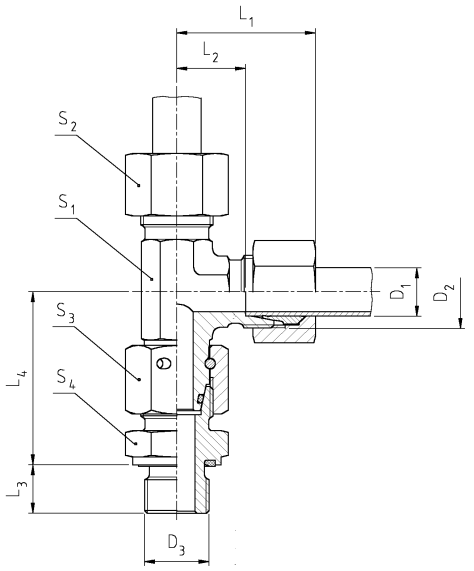

Thread :
B.S.P.
parallel

Series	PN (Bar)	D_1	D_2	D_3	L_1 ~	L_2	L_3	L_4	S_1	S_2	S_3	S_4	Order Code
L	315	6	M 12 x 1,5	G 1/8 A	27	12	8	34,5	12	14	17	14	EL 6 LR
L	315	8	M 14 x 1,5	G 1/4 A	29	14	12	37,5	12	17	17	17	EL 8 LR
L	315	10	M 16 x 1,5	G 1/4 A	30	15	12	40	14	19	19	19	EL 10 LR
L	315	12	M 1,5 x 18	G 3/8 A	32	17	12	42	17	22	22	22	EL 12 LR
L	315	15	M 22 x 1,5	G 1/2 A	36	21	14	46,5	19	27	27	27	EL 15 LR
L	315	18	M 26 x 1,5	G 1/2 A	40	23,5	14	50	24	32	32	27	EL 18 LR
L	160	22	M 30 x 2	G 3/4 A	44	27,5	16	55	27	36	36	32	EL 22 LR
L	160	28	M 36 x 2	G 1 A	47	30,5	18	59	36	41	41	41	EL 28 LR
L	160	35	M 45 x 2	G 1 1/4 A	56	34,5	20	68,5	41	50	50	50	EL 35 LR
L	160	42	M 52 x 2	G 1 1/2 A	63	40	22	75	50	60	60	55	EL 42 LR
S	630	6	M 14 x 1,5	G 1/4 A	31	16	12	40	12	17	17	17	EL 6 SR
S	630	8	M 16 x 1,5	G 1/4 A	32	17	12	42,5	14	19	19	19	EL 8 SR
S	630	10	M 18 x 1,5	G 3/8 A	34	17,5	12	45	17	22	22	22	EL 10 SR
S	630	12	M 20 x 1,5	G 3/8 A	38	21,5	12	48	17	24	24	22	EL 12 SR
S	630	14	M 22 x 1,5	G 1/2 A	40	22	14	54	19	27	27	27	EL 14 SR
S	500	16	M 1,5 x 24	G 1/2 A	43	24,5	14	55	24	30	30	27	EL 16 SR
S	400	20	M 30 x 2	G 3/4 A	47	26,5	16	65	27	36	36	32	EL 20 SR
S	400	25	M 36 x 2	G 1 A	54	30	18	73	36	46	46	41	EL 25 SR
S	400	30	M 42 x 2	G 1 1/4 A	62	35,5	20	78,5	41	50	50	50	EL 30 SR
S	315	38	M 52 x 2	G 1 1/2 A	72	41	22	89	50	60	60	55	EL 38 SR

☆ All Diamention in Millimeters
☆ Diamentions give are Approx Fig with tightened nut

GZ - Swivel Union

ARCO
HYDRAULIC FITTINGS

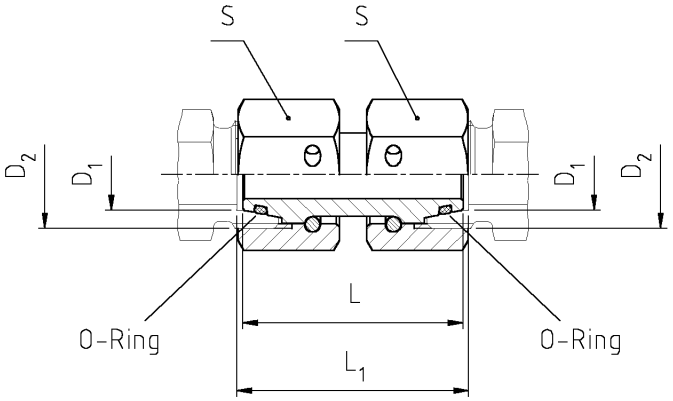

Series	PN (Bar)	D_1	D_2	L	L_1	S	Order Code
L	315	6	M 12 x 1,5	35	37	17	GZ 6 L
L	315	8	M 14 x 1,5	37	39	17	GZ 8 L
L	315	10	M 16 x 1,5	37	38	19	GZ 10 L
L	315	12	M 18 x 1,5	37	38	22	GZ 12 L
L	315	15	M 22 x 1,5	42	43	27	GZ 15 L
L	315	18	M 26 x 1,5	42	44	32	GZ 18 L
L	160	22	M 30 x 2	43	45	36	GZ 22 L
L	160	28	M 36 x 2	44	46	41	GZ 28 L
L	160	35	M 45 x 2	51	56	50	GZ 35 L
L	160	42	M 52 x 2	51	57	60	GZ 42 L
S	630	6	M 14 x 1,5	36	38	17	GZ 6 S
S	630	8	M 16 x 1,5	36	38	19	GZ 8 S
S	630	10	M 18 x 1,5	37	39	22	GZ 10 S
S	630	12	M 20 x 1,5	38	40	24	GZ 12 S
S	630	14	M 22 x 1,5	40	43	27	GZ 14 S
S	500	16	M 24 x 1,5	44	48	30	GZ 16 S
S	400	20	M 30 x 2	51	56	36	GZ 20 S
S	400	25	M 36 x 2	46	54	46	GZ 25 S
S	400	30	M 42 x 2	57	68	50	GZ 30 S
S	315	38	M 52 x 2	63	79	60	GZ 38 S

☆ All Diamention in Millimeters
☆ Diamentions give are Approx Fig with tightened nut

WNO - Welding Nipple

ARCO
HYDRAULIC FITTINGS

24° O-ring weld nipple

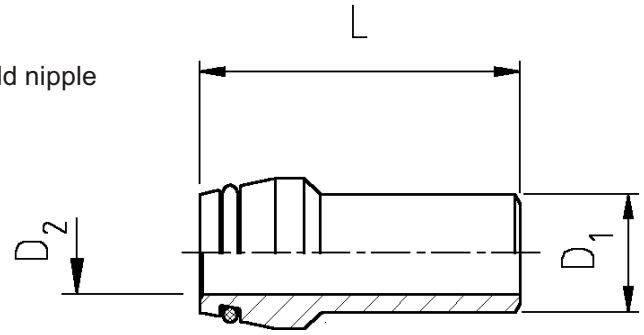

Series	D_1	D_2	L	recommended tube	Order code	Bar
L[3]/ S[4])	06	3.0	40.0	6 X 1.5	WNO 06 X 1.5	528
	08	4.5	40.0	8 X 1.5	WNO 08 X 1.5	414
	08	4.0	40.0	8 X 2.0	WNO 08 X 2.0	528
	10	8.0	40.0	10 X 1.0	WNO 10 X 1	249
	10	7.0	40.0	10 X 1.5	WNO 10 X 1.5	358
	10	6.0	40.0	10 X 2.0	WNO 10 X 2	460
	12	9.0	38.0	12 X 1.5	WNO 12 X 1.5	305
	12	8.0	38.0	12 X 2.0	WNO 12 X 2	393
	12	7.0	38.0	12 X 2.5	WNO 12 X 2.5	476
L[3])	15	11.0	35.0	15 X 2.0	WNO 15 X 2	315
	15	10.0	35.0	15 X 2.5	WNO 15 X 2.5	315
	18	13.0	39.0	18 X 2.5	WNO 18 X 2.5	315
	22	17.0	41.0	22 X 2.5	WNO 22 X 2.5	160
	28	23.0	45.0	28 X 2.5	WNO 28 X 2.5	160
	28	22.0	45.0	28 X 3.0	WNO 28 X 3	160
	35	28.0	47.0	35 X 3.5	WNO 35 X 3.5	160
	35	27.0	47.0	35 X 4.0	WNO 35 X 4	160
	42	36.0	53.0	42 X 3.0	WNO 42 X 3	160
	42	34.0	53.0	42 X 4.0	WNO 42 X 4	160
S[4])	14	10.0	40.0	14 X 2.0	WNO 14 X 2	343
	14	8.0	40.0	14 X 3.0	WNO 14 X 3	487
	16	13.0	46.0	16 X 1.5	WNO 16 X 1.5	234
	16	12.0	46.0	16 X 2.0	WNO 16 X 2	305
	16	11.0	46.0	16 X 2.5	WNO 16 X 2.5	372
	16	10.0	46.0	16 X 3.0	WNO 16 X 3	400
	20	16.0	53.0	20 X 2.0	WNO 20 X 2	249
	20	15.0	53.0	20 X 2.5	WNO 20 X 2.5	305
	20	14.0	53.0	20 X 3.0	WNO 20 X 3	358
	20	13.0	53.0	20 X 3.5	WNO 20 X 3.5	400
	20	12.0	53.0	20 X 4.0	WNO 20 X 4	400
	25	19.0	54.0	25 X 3.0	WNO 25 X 3	294
	25	18.0	54.0	25 X 3.5	WNO 25 X 3.5	337
	25	17.0	54.0	25 X 4.0	WNO 25 X 4	379
	25	15.0	54.0	25 X 5.0	WNO 25 X 5	400
	30	24.0	61.0	30 X 3.0	WNO 30 X 3	249
	30	22.0	61.0	30 X 4.0	WNO 30 X 4	323
	30	20.0	61.0	30 X 5.0	WNO 30 X 5	393
	30	18.0	61.0	30 X 6.0	WNO 30 X 6	400
	38	32.0	64.0	38 X 3.0	WNO 38 X 3	200
	38	30.0	64.0	38 X 4.0	WNO 38 X 4	261
	38	28.0	64.0	38 X 5.0	WNO 38 X 5	315
	38	26.0	64.0	38 X 6.0	WNO 38 X 6	315
	38	24.0	64.0	38 X 7.0	WNO 38 X 7	315

☆ All Diamention in Millimeters
☆ Diamentions give are Approx Fig with tightened nut

SWVE-R- Swivel Banjos

ARCO
HYDRAULIC FITTINGS

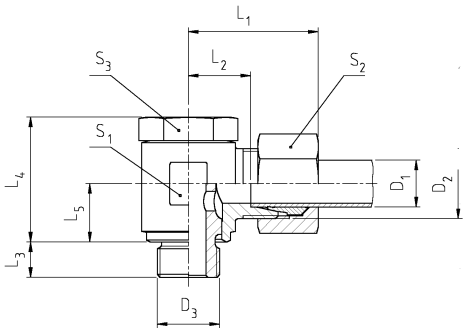

Fig - 1

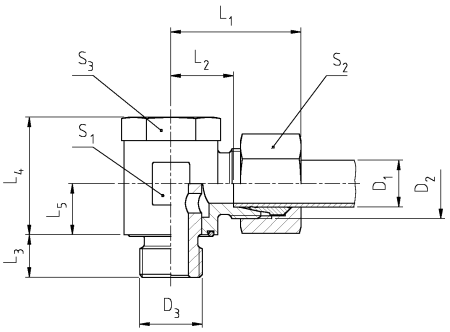

Fig - 2

Thread:
B.S.P.
parallel

Fig. 1 – With turned sealing edge
Fig. 2 – Sealing by Perbunan O-Ring

Series	PN (Bar)	D_1	D_2	D_3	L_1 ~	L_2	L_3	L_4	L_5	S_1	S_2	S_3	Fig.	Order Code
L	250	6	M 12 x 1,5	G 1/8 A	27	12	6	22	10	14	14	14	1	SWVE 6 LR
L	250	8	M 14 x 1,5	G 1/4 A	30	15	9	25	14	19	17	19	1	SWVE 8 LR
L	250	10	M 16 x 1,5	G 1/4 A	29	14,5	9	27	14	19	19	19	1	SWVE 10 LR
L	250	12	M 18 x 1,5	G 3/8 A	30	16	9	32	15	22	22	22	1	SWVE 12 LR
L	250	15	M 22 x 1,5	G 1/2 A	35	19,5	9	37	17	27	27	27	1	SWVE 15 LR
L	160	18	M 26 x 1,5	G 1/2 A	36	20,5	11	44	21	30	32	27	1	SWVE 18 LR
L	160	22	M 30 x 2	G 3/4 A	41	25,5	13	48	24,5	36	36	32	1	SWVE 22 LR
L	100	28	M 36 x 2	G 1 A	41	31,5	18	62,5	30	50	41	41	2	SWVE 28 LR
L	100	35	M 45 x 2	G 1 1/4 A	49	35,5	17	74,5	32,5	60	50	50	2	SWVE 35 LR
L	100	42	M 52 x 2	G 1 1/2 A	55	40	21	84,5	41,5	70	60	60	2	SWVE 42 LR
S	400	6	M 14 x 1,5	G 1/4 A	30	15,5	9	25	14	19	17	19	1	SWVE 6 SR
S	400	8	M 16 x 1,5	G 1/4 A	30	15,5	9	27	14	19	19	19	1	SWVE 8 SR
S	400	10	M 18 x 1,5	G 3/8 A	32	16,5	9	32	14	22	22	22	1	SWVE 10 SR
S	400	12	M 20 x 1,5	G 3/8 A	33	16,5	9	34	16	24	24	24	1	SWVE 12 SR
S	400	14	M 22 x 1,5	G 1/2 A	38	20,5	11	37	17	27	27	27	1	SWVE 14 SR
S	400	16	M 24 x 1,5	G 1/2 A	39	21,5	11	42	21	30	30	27	1	SWVE 16 SR
S	400	20	M 30 x 2	G 3/4 A	45	24,5	13	48	23	36	36	32	1	SWVE 20 SR
S	400	25	M 36 x 2	G 1 A	46	31	18	62,5	31	50	46	41	2	SWVE 25 SR
S	250	30	M 42 x 2	G 1 1/4 A	53	31,5	17	74,5	36,5	60	50	50	2	SWVE 30 SR
S	250	38	M 52 x 2	G 1 1/2 A	61	41	20	84,5	41,5	70	60	60	2	SWVE 38 SR

☆ All Diamention in Millimeters
☆ Diamentions give are Approx Fig with tightened nut

RI - Male / Female Reducer / Expander

ARCO
HYDRAULIC FITTINGS

Thread:
B.S.P.
parallel

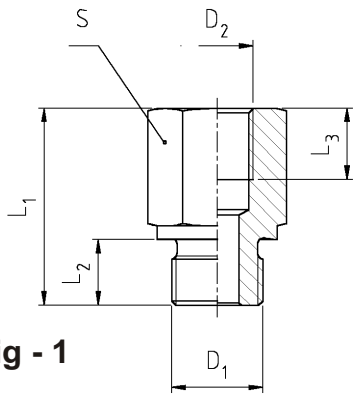

Fig - 1

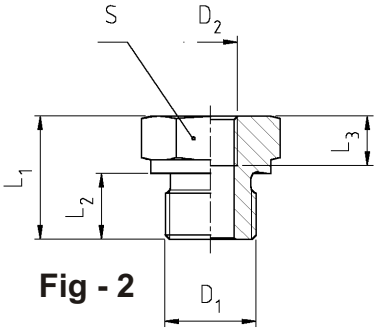

Fig - 2

PN	D_1	D_2	L_1	L_2	L_3	S	Fig.	Order Code
400	G 1/8 A	G 3/8	30	8	12	22	1	RI 1/8 - 3/8
400	G 1/8 A	G 1/4	31	8	13	19	1	RI 1/8 - 1/4
315	G 1/4 A	G 3/4	43	12	17	36	1	RI 1/4 - 3/4
400	G 1/4 A	G 1/2	40	12	15	30	1	RI 1/4 - 1/2
400	G 1/4 A	G 3/8	36	12	13	22	1	RI 1/4 - 3/8
400	G 1/4 A	G 1/8	29	12	9	19	1	RI 1/4 - 1/8
315	G 3/8 A	G 3/4	44	12	17	36	1	RI 3/8 - 3/4
400	G 3/8 A	G 1/2	41	12	15	30	1	RI 3/8 - 1/2
400	G 3/8 A	G 1/4	36	12	13	22	1	RI 3/8 - 1/4
400	G 3/8 A	G 1/8	23	12	9	22	2	RI 3/8 - 1/8
315	G 1/2 A	G 1	49	14	19	41	1	RI 1/2 -1
315	G 1/2 A	G 3/4	46	14	17	36	1	RI 1/2 - 3/4
315	G 1/2 A	G 3/8	37	14	13	27	1	RI 1/2 - 3/8
315	G 1/2 A	G 1/4	24	14	13	27	2	RI 1/2 - 1/4
160	G 3/4 A	G 1 1/2	60	16	23	60	1	RI 3/4 -1 1/2
160	G 3/4 A	G 1 1/4	55	16	21	55	1	RI 3/4 -1 1/4
315	G 3/4 A	G 1	51	16	19	41	1	RI 3/4 -1
315	G 3/4 A	G 1/2	43	16	15	32	1	RI 3/4 - 1/2
315	G 3/4 A	G 3/8	26	16	13	32	2	RI 3/4 - 3/8
315	G 3/4 A	G 1/4	26	16	13	32	2	RI 3/4 - 1/4
160	G 1 A	G 1 1/2	59	18	23	60	1	RI 1 -1 1/2
160	G 1 A	G 1 1/4	57	18	21	55	1	RI 1 -1 1/4
315	G 1 A	G 3/4	49	18	17	41	1	RI 1 - 3/4
315	G 1 A	G 1/2	29	18	15	41	2	RI 1 - 1/2
315	G 1 A	G 3/8	29	18	13	41	2	RI 1 - 3/8
315	G 1 A	G 1/4	29	18	13	41	2	RI 1 - 1/4
160	G 1 1/4 A	G 1 1/2	60	20	23	60	1	RI 1 1/4 -1 1/2
160	G 1 1/4 A	G 1	53	20	19	50	1	RI 1 1/4 -1
160	G 1 1/4 A	G 3/4	32	20	17	50	2	RI 1 1/4 - 3/4
160	G 1 1/4 A	G 1/2	32	20	15	50	2	RI 1 1/4 - 1/2
160	G 1 1/2 A	G 1 1/4	58	22	21	55	1	RI 1 1/2 -1 1/4
160	G 1 1/2 A	G 1	36	22	19	55	2	RI 1 1/2 -1
160	G 1 1/2 A	G 3/4	36	22	17	55	2	RI 1 1/2 - 3/4
160	G 1 1/2 A	G 1/2	36	22	15	55	2	RI 1 1/2 - 1/2
160	G 2 A	G 1 1/2	58	18	24	70	1	RI 2 -1 1/2

☆ All Diamention in Millimeters
☆ Diamentions give are Approx Fig with tightened nut

KOR - Tube End Reducer L - Series

ARCO
HYDRAULIC FITTINGS

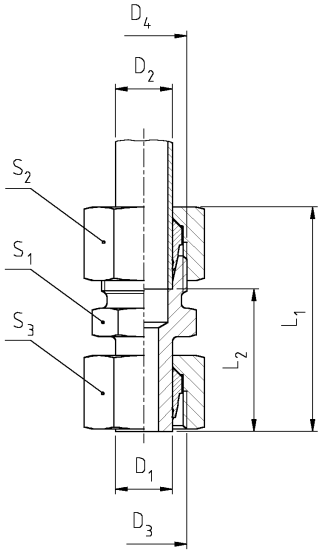

Series	PN (Bar)	D_1	D_2	D_3	D_4	L_1 ~	L_2	S_1	S_2	S_3	Order Code
L	315	8	6	M 14 x 1,5	M12 x 1,5	42	27	14	14	17	KOR 8/ 6 L
L	315	10	6	M 16 x 1,5	M14 x 1,5	42	27	14	14	19	KOR 10/ 6 L
L	315	10	8	M 16 x 1,5	M14 x 1,5	42	27	14	17	19	KOR 10/ 8 L
L	315	12	6	M 18 x 1,5	M12 x 1,5	42	27	14	14	22	KOR 12/ 6 L
L	315	12	8	M 18 x 1,5	M14 x 1,5	43	28	14	17	22	KOR 12/ 8 L
L	315	12	10	M 18 x 1,5	M16 x 1,5	44	29	17	19	22	KOR 12/10 L
L	315	15	6	M 22 x 1,5	M12 x 1,5	44	29	12	14	27	KOR 15/ 6 L
L	315	15	8	M 22 x 1,5	M14 x 1,5	44	29	17	17	27	KOR 15/ 8 L
L	315	15	10	M 22 x 1,5	M16 x 1,5	45	30	17	19	27	KOR 15/10 L
L	315	15	12	M 22 x 1,5	M18 x 1,5	46	31	19	22	27	KOR 15/12 L
L	315	18	6	M 26 x 1,5	M12 x 1,5	47	32	14	14	32	KOR 18/ 6 L
L	315	18	8	M 26 x 1,5	M14 x 1,5	47	32	14	17	32	KOR 18/ 8 L
L	315	18	10	M 26 x 1,5	M16 x 1,5	48	33	19	19	32	KOR 18/10 L
L	315	18	12	M 26 x 1,5	M18 x 1,5	48	33	19	22	32	KOR 18/12 L
L	315	18	15	M 26 x 1,5	M22 x 1,5	50	34	22	27	32	KOR 18/15 L
L	160	22	6	M 30 x 2	M12 x 1,5	48	33	19	14	36	KOR 22/ 6 L
L	160	22	8	M 30 x 2	M14 x 1,5	48	33	19	17	36	KOR 22/ 8 L
L	160	22	10	M 30 x 2	M16 x 1,5	49	34	19	19	36	KOR 22/10 L
L	160	22	12	M 30 x 2	M18 x 1,5	49	34	19	22	36	KOR 22/12 L
L	160	22	15	M 30 x 2	M22 x 1,5	52	36	24	27	36	KOR 22/15 L
L	160	22	18	M 30 x 2	M26 x 1,5	52	35,5	27	32	36	KOR 22/18 L

☆ All Diamention in Millimeters
☆ Diamentions give are Approx Fig with tightened nut

KOR - Tube End Reducer L - Series

ARCO
HYDRAULIC FITTINGS

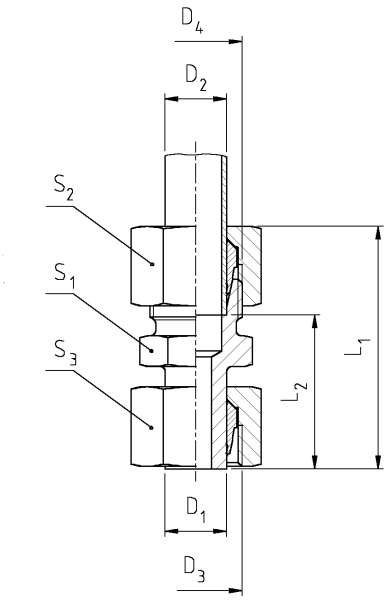

Series	PN (Bar)	D_1	D_2	D_3	D_4	L_1 ~	L_2	S_1	S_2	S_3	Order Code
L	160	28	6	M 36 x 2	M 12 x 1,5	45	30	24	14	41	KOR 28/ 6 L
L	160	28	8	M 36 x 2	M 14 x 1,5	45	30	24	17	41	KOR 28/ 8 L
L	160	28	10	M 36 x 2	M 16 x 1,5	46	31	24	19	41	KOR 28/10 L
L	160	28	12	M 36 x 2	M 18 x 1,5	46	31	24	22	41	KOR 28/12 L
L	160	28	15	M 36 x 2	M 22 x 1,5	48	32	24	27	41	KOR 28/15 L
L	160	28	18	M 36 x 2	M 26 x 1,5	54	37,5	30	32	41	KOR 28/18 L
L	160	28	22	M 36 x 2	M 30 x 2	56	39,5	30	36	41	KOR 28/22 L
L	160	35	6	M 45 x 2	M 12 x 1,5	50	35	30	14	50	KOR 35/ 6 L
L	160	35	8	M 45 x 2	M 14 x 1,5	50	35	30	17	50	KOR 35/ 8 L
L	160	35	10	M 45 x 2	M 16 x 1,5	51	36	30	19	50	KOR 35/10 L
L	160	35	12	M 45 x 2	M 18 x 1,5	51	36	30	22	50	KOR 35/12 L
L	160	35	15	M 45 x 2	M 22 x 1,5	53	37	30	27	50	KOR 35/15 L
L	160	35	18	M 45 x 2	M 26 x 1,5	53	36,5	30	32	50	KOR 35/18 L
L	160	35	22	M 45 x 2	M 30 x 2	55	38,5	30	36	50	KOR 35/22 L
L	160	35	28	M 45 x 2	M 36 x 2	62	45,5	36	41	50	KOR 35/28 L
L	160	42	6	M 52 x 2	M 12 x 1,5	52	37	36	14	60	KOR 42/ 6 L
L	160	42	8	M 52 x 2	M 14 x 1,5	52	37	36	17	60	KOR 42/ 8 L
L	160	42	10	M 52 x 2	M 16 x 1,5	53	38	36	19	60	KOR 42/10 L
L	160	42	12	M 52 x 2	M 18 x 1,5	53	38	36	22	60	KOR 42/12 L
L	160	42	15	M 52 x 2	M 22 x 1,5	55	39	36	27	60	KOR 42/15 L
L	160	42	18	M 52 x 2	M 26 x 1,5	55	38,5	36	32	60	KOR 42/18 L
L	160	42	22	M 52 x 2	M 30 x 2	57	40,5	36	36	60	KOR 42/22 L
L	160	42	28	M 52 x 2	M 36 x 2	61	44,5	36	41	60	KOR 42/28 L
L	160	42	35	M 52 x 2	M 45 x 2	68	46,5	46	50	60	KOR 42/35 L

☆ All Diamention in Millimeters
☆ Diamentions give are Approx Fig with tightened nut

KOR - Tube End Readucer S - Series

ARCO
HYDRAULIC FITTINGS

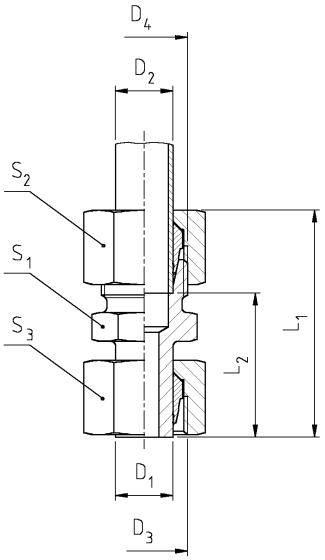

Series	PN (Bar)	D_1	D_2	D_3	D_4	L_1 ~	L_2	S_1	S_2	S_3	Order Code
S	630	8	6	M 16 x 1,5	M 14 x 1,5	48	33	14	17	19	KOR 8/ 6 S
S	630	10	6	M 18 x 1,5	M 14 x 1,5	48	33	14	17	22	KOR 10/ 6 S
S	630	10	8	M 18 x 1,5	M 16 x 1,5	50	35	17	19	22	KOR 10/ 8 S
S	630	12	6	M 20 x 1,5	M 14 x 1,5	48	33	14	17	24	KOR 12/ 6 S
S	630	12	8	M 20 x 1,5	M 16 x 1,5	50	35	17	19	24	KOR 12/ 8 S
S	630	12	10	M 20 x 1,5	M 18 x 1,5	51	34,5	19	22	24	KOR 12/10 S
S	630	14	6	M 22 x 1,5	M 14 x 1,5	49	34	17	17	27	KOR 14/ 6 S
S	630	14	8	M 22 x 1,5	M 16 x 1,5	51	36	17	19	27	KOR 14/ 8 S
S	630	14	10	M 22 x 1,5	M 18 x 1,5	52	35,5	19	22	27	KOR 14/10 S
S	630	14	12	M 22 x 1,5	M 20 x 1,5	54	37,5	22	24	27	KOR 14/12 S
S	500	16	6	M 24 x 1,5	M 14 x 1,5	53	38	17	17	30	KOR 16/ 6 S
S	500	16	8	M 24 x 1,5	M 16 x 1,5	53	38	17	19	30	KOR 16/ 8 S
S	500	16	10	M 24 x 1,5	M 18 x 1,5	54	37,5	19	22	30	KOR 16/10 S
S	500	16	12	M 24 x 1,5	M 20 x 1,5	56	39,5	22	24	30	KOR 16/12 S
S	500	16	14	M 24 x 1,5	M 22 x 1,5	59	41	22	27	30	KOR 16/14 S
S	400	20	6	M 30 x 2	M 14 x 1,5	56	41	17	17	36	KOR 20/ 6 S
S	400	20	8	M 30 x 2	M 16 x 1,5	56	41	17	19	36	KOR 20/ 8 S
S	400	20	10	M 30 x 2	M 18 x 1,5	59	42,5	22	22	36	KOR 20/10 S
S	400	20	12	M 30 x 2	M 20 x 1,5	59	42,5	22	24	36	KOR 20/12 S
S	400	20	14	M 30 x 2	M 22 x 1,5	62	44	24	27	36	KOR 20/14 S
S	400	20	16	M 30 x 2	M 24 x 1,5	62	43,5	24	30	36	KOR 20/16 S

☆All Diamention in Millimeters
☆Diamentions give are Approx Fig with tightened nut

KOR - Tube End Readucer S - Series

ARCO
HYDRAULIC FITTINGS

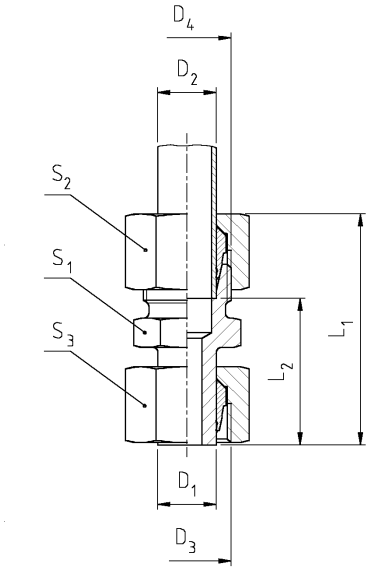

Series	PN (Bar)		D_1	D_2	D_3	D_4	L_1 ~	L_2	S_1	S_2	S_3	Order Code
S	400	25	6	M 36 x 2	M 14 x 1,5	53	38		22	17	46	KOR 25/ 6 S
S	400	25	8	M 36 x 2	M 16 x 1,5	53	38		22	19	46	KOR 25/ 8 S
S	400	25	10	M 36 x 2	M 18 x 1,5	54	37,5		22	22	46	KOR 25/10 S
S	400	25	12	M 36 x 2	M 20 x 1,5	54	37,5		22	24	46	KOR 25/12 S
S	400	25	14	M 36 x 2	M 22 x 1,5	57	39		22	27	46	KOR 25/14 S
S	400	25	16	M 36 x 2	M 24 x 1,5	68	49,5		27	30	46	KOR 25/16 S
S	400	25	20	M 36 x 2	M 30 x 2	70	49,5		32	36	46	KOR 25/20 S
S	400	30	6	M 42 x 2	M 14 x 1,5	55	40		24	17	50	KOR 30/ 6 S
S	400	30	8	M 42 x 2	M 16 x 1,5	55	40		24	19	50	KOR 30/ 8 S
S	400	30	10	M 42 x 2	M 18 x 1,5	56	39,5		24	22	50	KOR 30/10 S
S	400	30	12	M 42 x 2	M 20 x 1,5	56	39,5		24	24	50	KOR 30/12 S
S	400	30	14	M 42 x 2	M 22 x 1,5	59	41		24	27	50	KOR 30/14 S
S	400	30	16	M 42 x 2	M 24 x 1,5	59	40,5		24	30	50	KOR 30/16 S
S	400	30	20	M 42 x 2	M 30 x 2	73	52,5		32	36	50	KOR 30/20 S
S	400	30	25	M 42 x 2	M 36 x 2	76	52		41	46	50	KOR 30/25 S
S	315	38	6	M 52 x 2	M 14 x 1,5	62	47		32	17	60	KOR 38/ 6 S
S	315	38	8	M 52 x 2	M 16 x 1,5	62	47		32	19	60	KOR 38/ 8 S
S	315	38	10	M 52 x 2	M 18 x 1,5	63	46,5		32	22	60	KOR 38/10 S
S	315	38	12	M 52 x 2	M 20 x 1,5	63	46,5		32	24	60	KOR 38/12 S
S	315	38	14	M 52 x 2	M 22 x 1,5	66	48		32	27	60	KOR 38/14 S
S	315	38	16	M 52 x 2	M 24 x 1,5	66	47,5		32	30	60	KOR 38/16 S
S	315	38	20	M 52 x 2	M 30 x 2	78	57,5		41	36	60	KOR 38/20 S
S	315	38	25	M 52 x 2	M 36 x 2	82	58		41	46	60	KOR 38/25 S
S	315	38	30	M 52 x 2	M 42 x 2	85	58,5		46	50	60	KOR 38/30 S

☆All Diamention in Millimeters
☆Diamentions give are Approx Fig with tightened nut

RED - Tube End Readucer with Sealing Cone L - Series

ARCO
HYDRAULIC FITTINGS

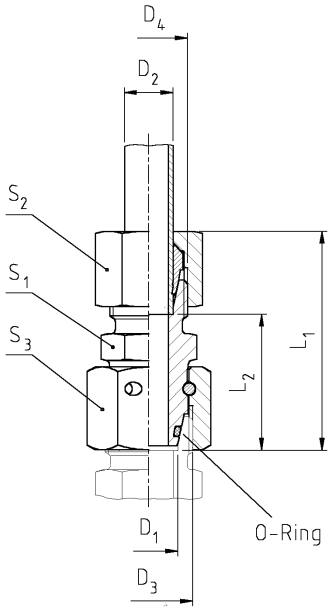

Series	PN	D_1	D_2	D_3	D_4	L_1 ~	L_2	S_1	S_2	S_3	Order Code
L	315	8	6	M 14 x 1,5	M 12 x 1,5	42	27	14	14	17	RED 8/ 6 L
L	315	10	6	M 16 x 1,5	M 12 x 1,5	43	28	17	14	19	RED 10/ 6 L
L	315	10	8	M 16 x 1,5	M 14 x 1,5	43	28	17	17	19	RED 10/ 8 L
L	315	12	6	M 18 x 1,5	M 12 x 1,5	43	28	17	14	22	RED 12/ 6 L
L	315	12	8	M 18 x 1,5	M 14 x 1,5	43	28	17	17	22	RED 12/ 8 L
L	315	12	10	M 18 x 1,5	M 16 x 1,5	44	29	17	19	22	RED 12/10 L
L	315	15	8	M 22 x 1,5	M 14 x 1,5	45	30	22	17	27	RED 15/ 8 L
L	315	15	10	M 22 x 1,5	M 16 x 1,5	46	31	22	19	27	RED 15/10 L
L	315	15	12	M 22 x 1,5	M 18 x 1,5	46	31	22	22	27	RED 15/12 L
L	315	18	10	M 26 x 1,5	M 16 x 1,5	47	31,5	27	19	32	RED 18/10 L
L	315	18	12	M 26 x 1,5	M 18 x 1,5	47	31,5	27	22	32	RED 18/12 L
L	315	18	15	M 26 x 1,5	M 22 x 1,5	48	32,5	27	27	32	RED 18/15 L
L	160	22	12	M 30 x 2	M 18 x 1,5	49	33,5	30	22	36	RED 22/12 L
L	160	22	15	M 30 x 2	M 22 x 1,5	52	33,5	30	27	36	RED 22/15 L
L	160	22	18	M 30 x 2	M 26 x 1,5	53	34,5	30	32	36	RED 22/18 L
L	160	28	18	M 36 x 2	M 26 x 1,5	54	37,5	36	32	41	RED 28/18 L
L	160	28	22	M 36 x 2	M 30 x 2	56	39,5	36	36	41	RED 28/22 L
L	160	35	22	M 45 x 2	M 30 x 2	57	40,5	46	36	50	RED 35/22 L
L	160	35	28	M 45 x 2	M 36 x 2	58	40,5	46	41	50	RED 35/28 L
L	160	42	28	M 52 x 2	M 36 x 2	62	45	50	41	60	RED 42/28 L
L	160	42	35	M 52 x 2	M 45 x 2	68	47	50	50	60	RED 42/35 L

☆ All Diamention in Millimeters
☆ Diamentions give are Approx Fig with tightened nut

RED - Tube End Readucer with Sealing Cone S -Series

ARCO
HYDRAULIC FITTINGS

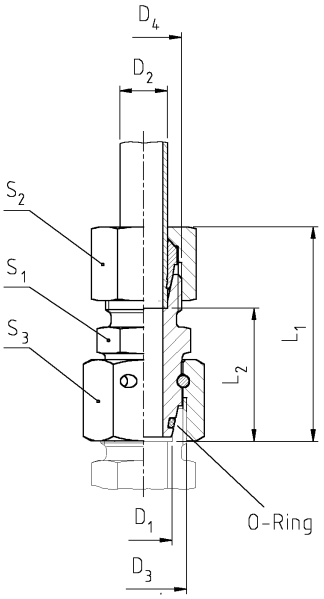

Series	PN	D_1	D_2	D_3	D_4	L_1 ≈	L_2	S_1	S_2	S_3	Order Code
S	630	8	6	M 16 x 1,5	M 14 x 1,5	45	30	17	17	19	RED 8/ 6 S
S	630	10	6	M 18 x 1,8	M 14 x 1,5	49	34	17	17	22	RED 10/ 6 S
S	630	10	8	M 18 x 1,5	M 16 x 1,5	49	34	17	19	22	RED 10/ 8 S
S	630	12	6	M 20 x 1,5	M 14 x 1,5	49	34	19	17	24	RED 12/ 6 S
S	630	12	8	M 20 x 1,5	M 16 x 1,5	49	34	19	19	24	RED 12/ 8 S
S	630	12	10	M 20 x 1,5	M 18 x 1,5	50	33,5	19	22	24	RED 12/10 S
S	630	14	10	M 22 x 1,5	M 18 x 1,5	52	36	22	22	27	RED 14/10 S
S	630	14	12	M 22 x 1,5	M 20 x 1,5	54	38	22	24	27	RED 14/12 S
S	500	16	8	M 24 x 1,5	M 16 x 1,5	52	36	22	19	30	RED 16/ 8 S
S	500	16	10	M 24 x 1,5	M 18 x 1,5	52	35,5	22	22	30	RED 16/10 S
S	500	16	12	M 24 x 1,5	M 20 x 1,5	54	37,5	22	24	30	RED 16/12 S
S	500	16	14	M 24 x 1,5	M 22 x 1,5	59	39,5	22	27	30	RED 16/14 S
S	400	20	15	M 30 x 2	M 22 x 1,5	58	41	24	27	36	RED 20/15 L
S	400	20	14	M 30 x 2	M 22 x 1,5	59	41,5	24	27	36	RED 20/14 S
S	400	20	16	M 30 x 2	M 24 x 1,5	59	41,5	24	30	36	RED 20/16 S
S	400	25	12	M 36 x 2	M 20 x 1,5	60	44	36	24	46	RED 25/12 S
S	400	25	16	M 36 x 2	M 24 x 1,5	64	45	36	30	46	RED 25/16 S
S	400	25	20	M 36 x 2	M 30 x 2	69	47	36	36	46	RED 25/20 S
S	400	30	16	M 42 x 2	M 24 x 1,5	68	50,5	41	30	50	RED 30/16 S
S	400	30	20	M 42 x 2	M 30 x 2	71	50,5	41	36	50	RED 30/20 S
S	400	30	25	M 42 x 2	M 36 x 2	76	52,5	41	46	50	RED 30/25 S
S	315	38	20	M 52 x 2	M 30 x 2	77	56,5	50	36	60	RED 38/20 S
S	315	38	25	M 52 x 2	M 36 x 2	80	56	50	46	60	RED 38/25 S
S	315	38	30	M 52 x 2	M 42 x 2	85	58	50	50	60	RED 38/30 S

☆All Diamention in Millimeters
☆Diamentions give are Approx Fig with tightened nut

GR - Straight Coupling Reducer

ARCO
HYDRAULIC FITTINGS

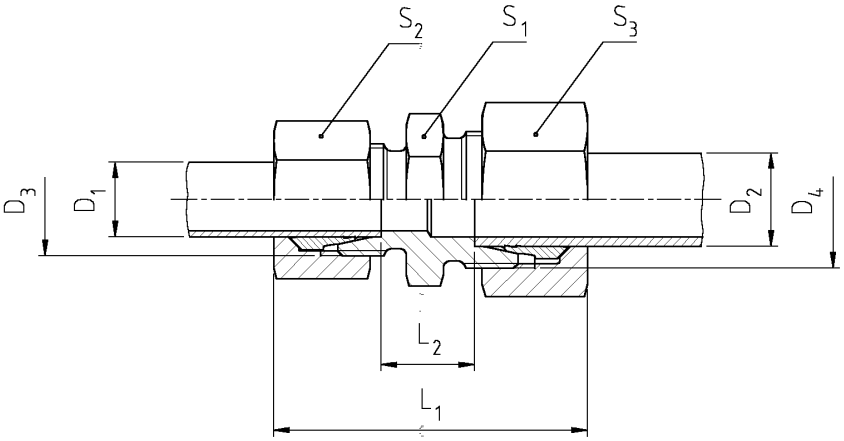

Series	PN (Bar)	D_1	D_2	D_3	D_4	L_1 ~	L_2	S_1	S_2	S_3	Order Code
L	315	6	8	M 12 x 1,5	M 14 x 1,5	40	11	14	14	17	GR 6/ 8 L
L	315	10	6	M 16 x 1,5	M 12 x 1,5	41	12	17	19	14	GR 10/ 6 L
L	315	10	8	M 16 x 1,5	M 14 x 1,5	41	12	17	19	17	GR 10/ 8 L
L	315	12	6	M 18 x 1,5	M 12 x 1,5	42	13	19	22	14	GR 12/ 6 L
L	315	12	8	M 18 x 1,5	M 14 x 1,5	42	13	19	22	17	GR 12/ 8 L
L	315	12	10	M 18 x 1,5	M 16 x 1,5	43	14	19	22	19	GR 12/10 L
L	315	15	6	M 22 x 1,5	M 12 x 1,5	44	14	24	27	14	GR 15/ 6 L
L	315	15	8	M 22 x 1,5	M 14 x 1,5	44	14	24	27	17	GR 15/ 8 L
L	315	15	10	M 22 x 1,5	M 16 x 1,5	45	15	24	27	19	GR 15/10 L
L	315	15	12	M 22 x 1,5	M 18 x 1,5	45	15	24	27	22	GR 15/12 L
L	315	18	6	M 26 x 1,5	M 12 x 1,5	45	14,5	27	32	14	GR 18/ 6 L
L	315	18	8	M 26 x 1,5	M 14 x 1,5	45	14,5	27	32	17	GR 18/ 8 L
L	315	18	10	M 26 x 1,5	M 16 x 1,5	46	15,5	27	32	19	GR 18/10 L
L	315	18	12	M 26 x 1,5	M 18 x 1,5	46	15,5	27	32	22	GR 18/12 L
L	315	18	15	M 26 x 1,5	M 22 x 1,5	48	16,5	27	32	27	GR 18/15 L
L	160	22	8	M 30 x 2	M 14 x 1,5	47	16,5	32	36	17	GR 22/ 8 L
L	160	22	10	M 30 x 2	M 16 x 1,5	48	17,5	32	36	19	GR 22/10 L
L	160	22	12	M 30 x 2	M 18 x 1,5	48	17,5	32	36	22	GR 22/12 L
L	160	22	15	M 30 x 2	M 22 x 1,5	50	18,5	32	36	27	GR 22/15 L
L	160	22	18	M 30 x 2	M 26 x 1,5	50	18	32	36	32	GR 22/18 L
L	160	28	15	M 36 x 2	M 22 x 1,5	51,5	19,5	41	41	27	GR 28/15 L
L	160	28	18	M 36 x 2	M 26 x 1,5	51,5	19	41	41	32	GR 28/18 L
L	160	28	22	M 36 x 2	M 30 x 2	53,5	21	41	41	36	GR 28/22 L
L	160	35	18	M 45 x 2	M 26 x 1,5	56,5	19	46	50	32	GR 35/18 L
L	160	35	22	M 45 x 2	M 30 x 2	58,5	21	46	50	36	GR 35/22 L
L	160	42	28	M 52 x 2	M 36 x 2	61,5	22,5	55	60	41	GR 42/28 L

☆ All Diamention in Millimeters
☆ Diamentions give are Approx Fig with tightened nut

GR - Straight Coupling Reducer

ARCO
HYDRAULIC FITTINGS

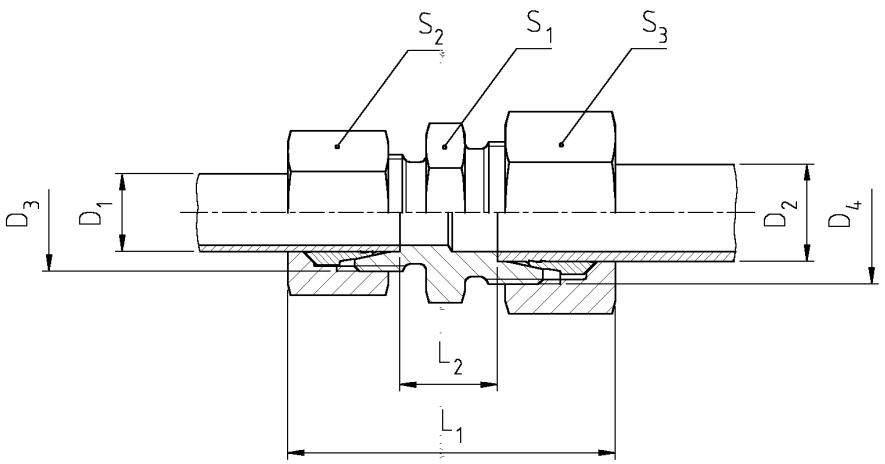

Series	PN (Bar)	D_1	D_2	D_3	D_4	L_1 ~	L_2	S_1	S_2	S_3	Order Code
S	630	8	6	M 16 x 1,5	M 14 x 1,5	47	18	17	19	17	GR 8/ 6 S
S	630	10	6	M 18 x 1,5	M 14 x 1,5	48	17,5	19	22	17	GR 10/ 6 S
S	630	10	8	M 18 x 1,5	M 16 x 1,5	48	17,5	19	22	19	GR 10/ 8 S
S	630	12	8	M 20 x 1,5	M 16 x 1,5	50	19,5	22	24	19	GR 12/ 8 S
S	630	12	10	M 20 x 1,5	M 18 x 1,5	51	19	22	24	22	GR 12/10 S
S	630	14	8	M 22 x 1,5	M 16 x 1,5	53	21	24	27	19	GR 14/ 8 S
S	630	14	10	M 22 x 1,5	M 18 x 1,5	54	20,5	24	27	22	GR 14/10 S
S	630	14	12	M 22 x 1,5	M 20 x 1,5	54	20,5	24	27	24	GR 14/12 S
S	500	16	6	M 24 x 1,5	M 14 x 1,5	53	20,5	27	30	17	GR 16/ 6 S
S	500	16	8	M 24 x 1,5	M 16 x 1,5	53	20,5	27	30	19	GR 16/ 8 S
S	500	16	10	M 24 x 1,5	M 18 x 1,5	54	20	27	30	22	GR 16/10 S
S	500	16	12	M 24 x 1,5	M 20 x 1,5	54	20	27	30	24	GR 16/12 S
S	500	16	14	M 24 x 1,5	M 22 x 1,5	57	21,5	27	30	27	GR 16/14 S
S	400	20	10	M 30 x 2	M 18 x 1,5	58,5	22	32	36	22	GR 20/10 S
S	400	20	12	M 30 x 2	M 20 x 1,5	58,5	22	32	36	24	GR 20/12 S
S	400	20	14	M 30 x 2	M 22 x 1,5	61,5	23,5	32	36	27	GR 20/14 S
S	400	20	16	M 30 x 2	M 24 x 1,5	61,5	23	32	36	30	GR 20/16 S
S	400	25	16	M 36 x 2	M 24 x 1,5	67,5	25,5	41	46	30	GR 25/16 S
S	400	25	20	M 36 x 2	M 30 x 2	70	25,5	41	46	36	GR 25/20 S
S	400	30	20	M 42 x 2	M 30 x 2	73	26	46	50	36	GR 30/20 S
S	400	30	25	M 42 x 2	M 36 x 2	77	26,5	46	50	46	GR 30/25 S
S	315	38	30	M 52 x 2	M 42 x 2	85,5	28,5	55	60	50	GR 38/30 S

☆ All Diamention in Millimeters
☆ Diamentions give are Approx Fig with tightened nut

BUZ - Cone Plugs (Closure Plug)

ARCO
HYDRAULIC FITTINGS

(VKA) - Blanking Plug for Cone

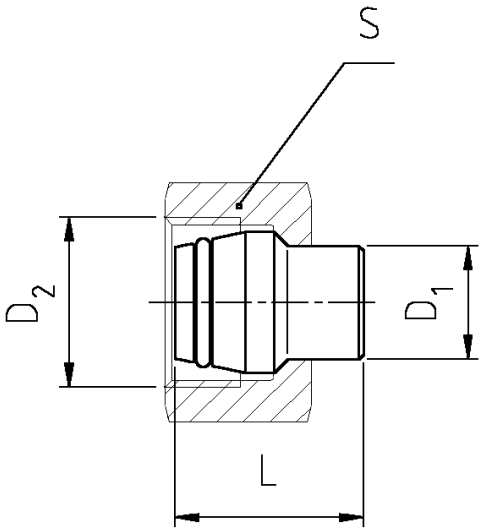

Series	PN (Bar)	D_1	D_2	L	S	Order Code
L	315	6	M 12 x 1,5	18,5	14	VKA 6 L
L	315	8	M 14 x 1,5	18,5	17	VKA 8 L
L	315	10	M 16 x 1,5	20	19	VKA 10 L
L	315	12	M 18 x 1,5	20	22	VKA 12 L
L	315	15	M 22 x 1,5	20,5	27	VKA 15 L
L	315	18	M 26 x 1,5	22,5	32	VKA 18 L
L	160	22	M 30 x 2	25	36	VKA 22 L
L	160	28	M 36 x 2	25,5	41	VKA 28 L
L	160	35	M 45 x 2	30	50	VKA 35 L
L	160	42	M 52 x 2	30	60	VKA 42 L
S	630	6	M 14 x 1,5	18,5	17	VKA 6 S
S	630	8	M 16 x 1,5	18,5	19	VKA 8 S
S	630	10	M 18 x 1,5	20	22	VKA 10 S
S	630	12	M 20 x 1,5	20	24	VKA 12 S
S	630	14	M 22 x 1,5	22,5	27	VKA 14 S
S	500	16	M 24 x 1,5	23,5	30	VKA 16 S
S	400	20	M 30 x 2	28,5	36	VKA 20 S
S	400	25	M 36 x 2	29	46	VKA 25 S
S	400	30	M 42 x 4	30,5	50	VKA 30 S
S	315	38	M 52 x 2	33	60	VKA 38 S

☆ All Diamention in Millimeters
☆ Diamentions give are Approx Fig with tightened nut

VSTI - Coller Plug with Hexagon Socket

ARCO
HYDRAULIC FITTINGS

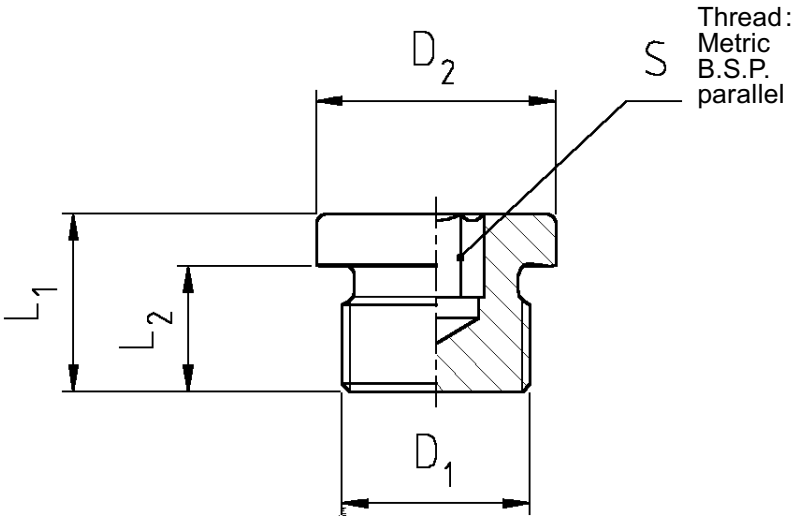

D_1	PN (Bar)	D_2	L_1	L_2	S	Order Code
M 10 x 1	400	14	12	8	5	VSTI 10 x 1
M 12 x 1,5	400	17	16	12	6	VSTI 12 x 1,5
M 14 x 1,5	400	19	16	12	6	VSTI 14 x 1,5
M 16 x 1,5	400	21	16	12	8	VSTI 16 x 1,5
M 18 x 1,5	400	23	17	12	8	VSTI 18 x 1,5
M 20 x 1,5	500	25	19	14	10	VSTI 20 x 1,5
M 22 x 1,5	400	27	19	14	10	VSTI 22 x 1,5
M 26 x 1,5	400	31	21	16	12	VSTI 26 x 1,5
M 27 x 2	400	32	21	16	12	VSTI 27 x 2
M 33 x 2	400	39	22	16	17	VSTI 33 x 2
M 42 x 2	315	49	22	16	22	VSTI 42 x 2
M 48 x 2	315	55	22	16	22	VSTI 48 x 2
G 1/8 A	400	14	12	8	5	VSTI 1/8
G 1/4 A	400	18	16	12	6	VSTI 1/4
G 3/8 A	400	22	16	12	8	VSTI 3/8
G 1/2 A	400	26	19	14	10	VSTI 1/2
G 3/4 A	400	32	21	16	12	VSTI 3/4
G 1 A	400	39	22	16	17	VSTI 1
G 1 1/4 A	315	49	22	16	22	VSTI 1 1/4
G 1 1/2 A	315	55	22	16	22	VSTI 1 1/2

☆ All Diamention in Millimeters
☆ Diamentions give are Approx Fig with tightened nut

ROV - Blanking plug for tube ends

ARCO
HYDRAULIC FITTINGS

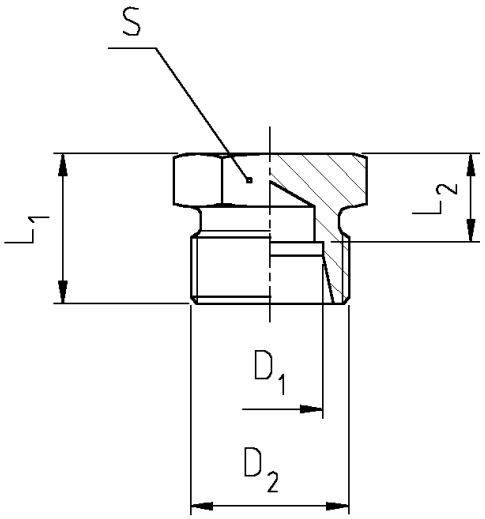

Series	PN (Bar)	D_1	D_2	L_1	L_2	S	Order Code
L	315	6	M 12 x 1,5	14	7	12	ROV 6 L
L	315	8	M 14 x 1,5	15	8	14	ROV 8 L
L	315	10	M 16 x 1,5	16	9	17	ROV 10 L
L	315	12	M 18 x 1,5	17	10	19	ROV 12 L
L	315	15	M 22 x 1,5	18	11	24	ROV 15 L
L	315	18	M 26 x 1,5	19	11,5	27	ROV 18 L
L	160	22	M 30 x 2	21	13,5	32	ROV 22 L
L	160	28	M 36 x 2	22	14,5	41	ROV 28 L
L	160	35	M 45 x 2	25	14,5	46	ROV 35 L
L	160	42	M 52 x 2	27	16	55	ROV 42 L
S	630	6	M 14 x 1,5	18	11	14	ROV 6 S
S	630	8	M 16 x 1,5	20	13	17	ROV 8 S
S	630	10	M 18 x 1,5	20	12,5	19	ROV 10 S
S	630	12	M 20 x 1,5	22	14,5	22	ROV 12 S
S	630	14	M 22 x 1,5	24	16	24	ROV 14 S
S	500	16	M 24 x 1,5	24	15,5	27	ROV 16 S
S	400	20	M 30 x 2	28	17,5	32	ROV 20 S
S	400	25	M 36 x 2	32	20	41	ROV 25 S
S	400	30	M 42 x 2	34	20,5	46	ROV 30 S
S	315	38	M 52 x 2	39	23	55	ROV 38 S

☆ All Diamention in Millimeters
☆ Diamentions give are Approx Fig with tightened nut

ARCO

HYDRAULIC FITTINGS

ARCO INDUSTRIES
K-1/717/2, G.I.D.C., Phase-4, Nr. Ratnadeep Industries,
Vatva, Ahmedabad. 382445 Gujarat,INDIA.
Phone : +91 - 79 - 25891155, 65131155 M. 09898209255
E-mail: arco123@sify.com Web site: arcohydrofit.com